FC: 12461/2026/SAMC/Bali C/Cerenche/DAO

REPUBLIQUE DU CAMEROUN
Paix – Travail – Patrie
---
MINISTERE DE DECENTRALIZATION
ET DEDEVELOPMENT LOCALE
---
REGION DU NORD - OUEST
---
DEPARTEMENT DE LA MEZAM
---
COMMUNE DE BALI
---

REPUBLIC OF CAMEROON
Peace – Work – Fatherland
---
MINISTRY OF DECENTRALIZATION AND
LOCAL DEVELOPMENT
---
NORTH WEST REGION
---
MEZAM DIVISION
---
BALI COUNCIL
---

# BALI COUNCIL INTERNAL TENDER'S BOARD

**********

## OPENED NATIONAL INVITATION TO TENDER

# TENDER FILE

**TENDER FILEN° 03/ONIT/BC/BCITB/2026OF 17 /11 / 2026**
**FOR THE CONSTRUCTION OF A REINFORCED CONCRETE MOM BRIDGE LINKING NJENKA AND MOM ALONG THE NJENKA-MOM ROAD AND THE CONSTRUCTION OF MBATMANDET BRIDGE LINKING MBATMANDET-FONTUH ROAD INBALIBALI COUNCIL AREA, MEZAM DIVISION OF THE NORTHWEST REGION BY EMERGENCY PROCEDURE.**

PROJECT OWNER: **THE LORD MAYOR OF BALI COUNCIL**

**FINANCING: BIP MINTP BUDGET 2026**

BUDGETARY LINE NO: 60 36 37023200003 0451 523411

---

**FINANCIAL YEAR 2026**

---

## TABLE OF CONTENT

Document No. 1: Tender notice

Document No. 2: General Regulations of the Invitation to Tender

Document No. 3: Special Regulations of the Invitation to Tender

Document No. 4: Special Administrative Conditions

Document No. 5: Special Technical Conditions

Document No. 6: Schedule of unit prices

Document No. 7: Bill of quantities and estimates

Document No. 8: The sub-detail of prices

Document No. 9: Model Contract

Document No. 10: Model documents to be used by bidders

Document No. 11: Justifications of preliminary studies

Document No. 12: List of banking establishments and financial bodies authorised to issue bonds for Public Contracts

# Document No. 1
# Tender Notice

REPUBLIQUE DU CAMEROUN
Paix – Travail – Patrie
---
MINISTERE DE DECENTRALIZATION
ET DEDEVELOPMENT LOCALE
---
REGION DU NORD - OUEST
---
DEPARTEMENT DE LA MEZAM
---
COMMUNE DE BALI
---

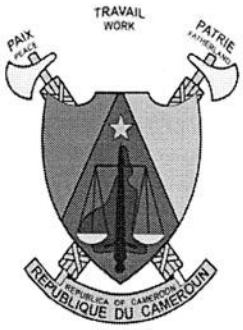


REPUBLIC OF CAMEROON
Peace – Work – Fatherland
---
MINISTRY OF DECENTRALIZATION AND
LOCAL DEVELOPMENT
---
NORTH WEST REGION
---
MEZAM DIVISION
---
BALI COUNCIL
---

# TENDER NOTICE

## OPEN NATIONAL INVITATION TO TENDER

**N° 03/ONIT/BC/BCITB/2026OF 17/ 11/ 2026**

**FOR THE CONSTRUCTION OF A REINFORCED CONCRETE MOM BRIDGE LINKING NJENKA AND MOM ALONG THE NJENKA-MOM ROAD AND THE CONSTRUCTION OF MBATMANDET BRIDGE LINKING MBATMANDET-FONTUH ROAD INBALIBALI COUNCIL AREA, MEZAM DIVISION OF THE NORTHWEST REGION BY EMERGENCY PROCEDURE.**

**Financing: BIP Budget of 2026/2027**

**1. Subject of the Invitation to Tender:**

Within the framework of 2026 Public Investment Budget, the Lord Mayor BALI Council, the Contracting Authority/the Project Owner, hereby launches an **Open National Invitation to tender** FOR THE CONSTRUCTION OF A REINFORCED CONCRETE MOM BRIDGE LINKING NJENKA AND MOM ALONG THE NJENKA-MOM ROAD AND THE CONSTRUCTION OF MBATMANDET BRIDGE LINKING MBATMANDET-FONTUH ROAD IN BALI COUNCIL AREA, MEZAM DIVISION OF THE NORTHWEST REGION BY EMERGENCY PROCEDURE.

**2. Nature of Work:**

Work to be done consists of

- Preparatory work
- Site preparation
- Earth works
- Foundation and equipment
- Painting
- Equipment

**3. Execution deadline**

The maximum deadline provided by the Delegated Contracting Authority for the execution of the works forming the subject of this Invitation to tender is **120 Days**

**4. Lot**

The works consist of a unique lot as follows:

THE CONSTRUCTION OF A REINFORCED CONCRETE MOM BRIDGE LINKING NJENKA AND MOM ALONG THE NJENKA-MOM ROAD AND THE CONSTRUCTION OF MBATMANDET BRIDGE LINKING MBATMANDET-FONTUH ROAD IN BALI COUNCIL AREA, MEZAM DIVISION OF THE NORTHWEST REGION BY EMERGENCY PROCEDURE.

**5. Estimated cost**

The estimated cost after preliminary studies is 149,000,000 (One Hundred and Forty-Nine Million) FCFA.

**6. Participation and origin**

Participation to this Invitation to Tender is opened to Cameroonian enterprises that are in compliance with the fiscal laws.

**7. Financing**

Works which form the subject of this Invitation to tender shall be financed by the 2026 Budget of MINTP.

**Bid bond**

Each bidder must include in his administrative documents, a bid bond issued by a first-rate banking establishment approved by the Ministry in charge of finance and whose list is found in document No. 12 of the Tender File, of an amount of **2,980,000 *CFA (Two Million Nine Hundred and Eighty Thousand CFA)***and valid for thirty (30) days beyond the date of validity of bids.

N.B. The said guarantee must be accompanied by a consignment receipt issued by the **"Caisse Depôt et Cosignation (CDEC)** in accordance with Circular letter N° 0000019/L/MINMAP of 5th June 2024 relating to the constitution of deposits, retention, restitution and deconsignment of bonds on public contracts

**8. Consultation of Tender File:**

The file may be consulted during working hours at the BALI Council, SIGAMP UNITas soon as this notice is published.

**8. Acquisition of Tender File:**

The tender file shall be obtained from the BALI Council, SIGAMP UNIT as soon as this Notice is published against payment of the non-refundable sum of 1**50 000** CFA francs (one hundred and fifty thousand Francs CFA), payable at the BALI Council Treasury, representing the cost of purchasing the Tender File.

**9. Submission of bids:**

Each offer drafted in English or French in 07 (Seven) copies including 01 (one) original and 06 (six) copies marked as such, should reach the BALI Council not later than 10 /**12/2026 at 10:00 AM** local time and should carry the inscription:

**<<OPEN NATIONAL INVITATION TO TENDER**
**N° 03/ONIT/BC/BCITB/2026 OF 17/11/ 2026**
**FOR THE CONSTRUCTION OF A REINFORCED CONCRETE MOM BRIDGE LINKING NJENKA AND MOM ALONG THE NJENKA-MOM ROAD AND THE CONSTRUCTION OF MBATMANDET BRIDGE LINKING MBATMANDET-FONTUH ROAD IN BALI COUNCIL AREA, MEZAM DIVISION OF THE NORTHWEST REGION BY EMERGENCY PROCEDURE**
***"To be opened only during the bid-opening session"***

**10. Admissibility of bids**

Under penalty of being rejected, only originals or true copies certified by the issuing service or administrative authorities (Senior Divisional Officer, Divisional Officers) must imperatively be produced in accordance with the Special Regulations of the Invitation to Tender.

They must obligatorily not be older than three (3) months preceding the date of submission of bids or may be established after the signature of the tender notice

Any bid not in compliance with the prescriptions of the Tender File shall be declared inadmissible. This refers especially to the absence of a bid bond issued by a first-rate bank approved by the Minister in charge of Finance. .

**11. Opening of bids:**

The bids shall be opened in a single phase. The opening of the administrative documents, the Technical and Financial offers will take place on the **10/11/2026** at **11:00 AM** local time, in the conference hall of the BALI Council. Only bidders may attend or be represented by duly mandated persons of their choice who have knowledge about the bids

**12. Evaluation criteria**

The bids shall be evaluated according to the main criteria as follows:

**A. <u>Eliminatory criteria</u>**

1. Absence or insufficient bid bond
2. Absence of a document in the administrative file not regularised after 48hrs of opening ;
3. False declaration or falsified documents;
4. A bid with the external envelope carrying a sign or mark leading to the identification of the bidder;
5. Non-compliance with model bid
6. Incomplete financial file;
7. Absence of a quantified unit price;
8. Non respect of **75**% of essential criteria;
9. Name of company suspended by MINMAP
10. Financial capacity below a third of the estimated cost
11. Absence of Certificate of categorisation in the ROAD SUB SECTOR of activities
12. Absence of the receipt of deposit from CDEC of the amount indicated in the bid bond

**B. <u>Essential criteria</u>**

1- General presentation of the Tender;
2- Financial capacity;
3- References of the company in similar achievements;
4- Quality of the personnel;
5- Technical organization of the works;
6- Safety measures on the site;
7- Logistics;
8- Attestation and report of site visit signed by the Contractor;
9- Special Technical Clauses initialed in all the pages and signed at the last page;
10- Special Administrative Clauses completed and initialed in all the pages and signed at the last page.

**13. Award**

This evaluation will be done in a purely binary way **yes** or **no** with an acceptable minimum of **75**% of the essential criteria taken into account.

The Contract will be awarded to the bidders who would have proposed the offer with the lowest amount, in conformity with the regulations of the Tender Documents and having satisfied to **100**% of the eliminatory criteria and at least **75**%of the essential criteria.

**14. Validity of bids**

Bidders will remain committed to their offers for ninety (90) days from the deadline set for the submission of tenders.

**15. Complementary information**

Complementary technical information may be obtained during working hours from the the BALI Council, SIGAMP UNIT.

**BALI Council the .../.../2026**

**The Lord Mayor**

17 NOV 2026

REPUBLIC OF CAMEROON
BALI SUB DIVISION
MEZAM DIVISION NORTH WEST REGION
BALI COUNCIL

Wandum Bunga Ernest
LORD MAYOR
BALI COUNCIL

*Copies:*

- MINMAP
- ARMP

- Chairperson of SCITB
- Project Owner
- Notice Boards

REPUBLIQUE DU CAMEROUN
Paix – Travail – Patrie
---
MINISTERE DE DECENTRALIZATION ET DEDEVELOPMENT LOCALE
---
REGION DU NORD - OUEST
---
DEPARTEMENT DE LA MEZAM
---
COMMUNE DE BALI
---

REPUBLIC OF CAMEROON
Peace – Work – Fatherland
---
MINISTRY OF DECENTRALIZATION AND LOCAL DEVELOPMENT
---
NORTH WEST REGION
---
MEZAM DIVISION
---
BALI COUNCIL
---

# AVIS D'APPEL D'OFFRES NATIONAL OUVERT

**N° 03/AONO/ BC/CIPM/2026 DU 17/11/2026 POUR LES TRAVAUX DE CONSTRUCTION DUPONT MOM** LINKING **NJENKA ET MOM ALONG THE NJENKA-MOM ROAD** AND **THE CONSTRUCTION OF MBATMANDET BRIDGE LINKING MBATMANDET-FONTUH ROAD** IN BALI **DANS L'ARRONDISSEMENT DEBALI, DEPARTEMENT DE LA MEZAM, REGION DU NORD OUEST EN PROCEDURE D'URGENCE.**

**Financement : BUDGET DU MINTP - EXERCICE 2026**

**Objet de l'Appel d'Offre:** Dans le cadre de l'exercice budgétaire 2026, le maire de la Commune de BALI Autorité Contractante lance, un Appel d'Offres National Ouvert **POUR LES TRAVAUX DE CONSTRUCTION DUPONT MOM** LINKING **NJENKA ET MOM ALONG THE NJENKA-MOM ROAD** AND **THE CONSTRUCTION OF MBATMANDET BRIDGE LINKING MBATMANDET-FONTUH ROAD** INBALI**DANS L'ARRONDISSEMENT DE BALI, DEPARTEMENT DE LA MEZAM, REGION DU NORD OUEST EN PROCEDURE D'URGENCE.**

## 1. Consistance des travaux

Les travaux comprennent notamment :

- Travaux préparatoires
- Site preparation
- Terrassement
- Foundation and equipement
- Le reprofilage simple

## 2. Délais d'exécution

Le délai maximum prévu par le Maître d'Ouvrage Délégué pour la réalisation des travaux objet du présent appel d'offres est de **cent-vingt (120)** jours

## 3. Allotissement

Les travaux sont constitués en **un (01)** lot ci-après défini :

**POUR LES TRAVAUX DE CONSTRUCTION** DUPONT **MOM LINKING NJENKA** ET **MOM ALONG THE NJENKA-MOM ROAD AND THE CONSTRUCTION OF MBATMANDET BRIDGE LINKING MBATMANDET-FONTUH ROAD IN BALI**DANS L'ARRONDISSEMENT DE BALI, DEPARTEMENT DE LA MEZAM, REGION DU NORD OUEST EN PROCEDURE D'URGENCE.

**Coût prévisionnel**

Le coût prévisionnel de l'opération à l'issue des études préalables est de (149, 000,000) FCFA.

## 4. Participationetorigine

La participation à cette consultation est ouverte aux entreprises de droit camerounais

**5. Financement**

Les travaux objet du présent appel d'offres sont financés par le Budget de MINTP de l'exercice 2026

**Cautionnement provisoire**

Chaquesoumissionnairedoitjoindreàsespièces administratives, une caution de soumission établie par une banque de premier ordre agréée par le Ministère chargé des finances et dont la liste figure danslapièce1 2duDAO, d'un montant de **FCFA (2, 980,000 FCFA)** et valablependanttrente30joursau-delàde la date originale de validitédesoffres AVEC LE RECU DU CDEC INCLUS COMME PREUVE DE DEPOT

**6. ConsultationduDossierd'Appeld'Offres**

Le Dossier d'Appel d'Offres peut être consulté et obtenu aux heures ouvrables à la Mairie de BALI, Bureau de SIGAMP(677181549/696430804) dès publication du présent avis

**7. AcquisitionduDossierd'Appeld'Offres**

Ledossierpeutêtreobtenuaux heures ouvrables à la Mairie de BALI Unite de SIGAMP, contre présentation d'une quittance de versement au Trésor de la commune de BALI de la somme non remboursable de **150.000F CFA**

**8. Remisedesoffres**

Chaqueoffrerédigéeenfrançaisouenanglaisen (07) exemplaires dont un (01) original et(06)copiesmarquéescommetelles,devra parvenir contre récépissé à la Marie de BALI au plus tard le 10/**12/2026 à 10H00**, heure locale et devra porter la mention suivante :

**«AVIS D'APPEL D'OFFRES NATIONAL OUVERT**
**N° 03/AONO/ BC/BCITB/2026 DU 17/11/2026 POUR LES TRAVAUX DE CONSTRUCTION** DUPONT **MOM LINKING NJENKA** ET **MOM ALONG THE NJENKA-MOM ROAD AND THE CONSTRUCTION OF MBATMANDET BRIDGE LINKING MBATMANDET-FONTUH ROAD IN BALI** DANS L'ARRONDISSEMENT DE BALI, DEPARTEMENT DE LA MEZAM, REGION DU NORD OUEST EN PROCEDURE D'URGENCE.
**«A N'OUVRIR QU'EN SEANCE DE DEPOUILLEMENT»**

**9. Recevabilitédesoffres**

Sous peine de rejet, les pièces du dossier administratifrequisesdoiventêtreproduites enoriginauxouencopiescertifiéesconformesparle service émetteur ou une autorité administrative (Préfet, Sous-préfet,...), conformément aux stipulationsduRèglementParticulierdel'Appeld'Offres.

Ellesdoiventdaterdemoinsdetrois (03)moisprécédantladate originale dedépôtdesoffresou avoir été établies postérieurement à la date de signaturedel'Avisd'Appeld'Offres.

Toute offreincomplète conformément aux prescriptions du Dossier d'Appel d'Offres sera déclarée irrecevable. Notamment l'absence de la cautiondesoumissiondélivréeparunebanquede premier ordre agréée par le Ministère chargé des Finances.

**10. Ouverturedesplis**

L'ouverture des plis se fera en un temps. L'ouverture des pièces administratives et des offres techniques et financières aura lieu **le 10/12/2026 à 11h00**, heure locale, dans la salle de conférence de la Mairie de BALIen présence des soumissionnaires ou de leurs représentants dûment mandatés et ayant une parfaite connaissance du dossier.

**11. Critèresd'évaluation**

Les offres seront évaluées selon les principaux critères suivants :

**A - Critères éliminatoires**

Il s'agitnotamment:

1- Absence d'une caution de soumission
2- Absence d'une pièce administrative ;
3- Fausses déclarations ou pièces falsifiées;
4- Offres dont l'enveloppe extérieure porte des mentions permettant de reconnaître le Soumissionnaire;

5- Non-conformité du model de soumission
6- Offres financière incomplète,
7- Absence d'un prix unitaire quantifié ;
8- Le non-respect de **75**% des critères essentiels ;
9- Entreprise suspendue par le MINMAP
10- Capacité financière inferieur au tiers du cout prévisionnel.
11- Certificat de categorisation en sou secteur route
12- Absence de la quittance de dépôt de CDEC du montant indiqué dans la caution de soumission

**B - Critères essentiels**

Lescritèresrelatifsàlaqualificationdescandidats porterontàtitreindicatifsur:

1- Présentation générale de l'offre ;
2- Capacité financière ;
3- Références de l'entreprise dans les réalisations similaires ;
4- Qualité du personnel ;
5- Organisation technique des travaux ;
6- Sécurité au chantier ;
7- Moyens logistiques ;
8- Attestation et rapport de visite du site signe par l, entreprise;
9- Cahier des Clauses Techniques Particulières paraphé à chaque page et signé à la dernière page ;
10- Cahier des Clauses Administratives Particulières complété et paraphé à chaque page et signé à la dernière page.

Les critères essentiels sont soumis à des minima dont le détail est donné dans le Règlement Particulier de l'Appel d'Offres (RPAO).

**12. Attribution**

Cette évaluation se fera de manière purement binaire oui ou non avec un minimum acceptable d'au moins **75**%de l'ensemble des critères essentiels pris en compte.

Le marché sera attribué au soumissionnaire qui aura proposé l'offre la moins disante, conforme pour l'essentiel aux prescriptions du Dossier d'Appel d'Offres, ayant satisfait à **100**% des critères éliminatoires et au moins **75**% des critères essentiels.

**13. Duréedevaliditédesoffres**

Lessoumissionnairesrestentengagésparleuroffre pendant 90 jours à partirdeladatelimitefixée pourlaremisedesoffres.

**14. Renseignementscomplémentaires**

Les renseignements complémentaires d'ordre technique peuvent être obtenus auprès de la Marie de BALI, Bureau de SIGAMP

**Fait à la Commune de BALI, le 17 NOV 2026**

**LE MAIRE**

REPUBLIC OF CAMEROON
BALI SUB DIVISION
NORTH WEST REGION
MEZAM DIVISION-NORTH WEST REGION
BALI COUNCIL

*Wandum Bunga Ernest*
LORD MAYOR
BALI COUNCIL

Copie :
- MINMAP
- ARMP;
- Maître d'Ouvrage;
- Président CIPM;
- Affichage.

# DOCUMENT NO. 2:
# GENERAL REGULATIONS OF THE INVITATION TO TENDER

## Table of Content


**A. General**

Article 1: Scope of the tender.....
Article 2: Financing.....
Article 3: Fraud and corruption.....
Article 4: Candidates admitted to compete.....
Article 5: Building materials, materials, supplies, equipment and authorised services...
Article 6: Qualification of the bidder.....
Article 7: Visit of the work site .....

B. **Tender File**.....
Article 8: Content of Tender File.....
Article 9: Clarifications on Tender File and complaints .....
Article 10: Modification of the Tender File.....

**C. Preparation of Bids**

Article 11: Tender fees.....
Article 12: Language of bid.....
Article 13: Constituent documents of the bid.....
Article 14: Amount of bid.....
Article 15: Currency of bid and payment.....
Article 16: Validity of bids.....
Article 17: Bid bond.....
Article 18: Varying proposals by bidders.....
Article 19: Preparatory meeting to the establishment of bids.....
Article 20: Form and signature of bids.....

D. **Submission of bids**.....
Article 21: Sealing and marking of bids.....
Article 22: Date and time-limit for submission of bids.....
Article 23: Out of time-limit bids.....
Article 24: Modification, substitution and withdrawal of bids.....

E. **Opening and evaluation of bids** .....
Article 25: Opening of bids.....
Article 26: Confidential nature of the procedure.....
Article 27: Clarifications on the bid and contact with Contracting Authority.....
Article 28: Determination of their compliance.....
Article 29: Qualification of the bidder.....
Article 30: Correction of errors.....
Article 31: Conversion into a single currency.....
Article 32: Evaluation of financial bids.....
Article 33: National preference.....

F. **Award of the Contract**.....
Article 34: Award.....
Article 35: Right of the Contracting Authority to declare an Invitation to Tender unsuccessful or to cancel a procedure.....
Article 36: Notification of the award of the Contract.....
Article 37: Signature of the Contract.....
Article 38: Final bond.....

## GENERAL RULES OF THE INVITATION TO TENDER

### A. General

**Article 1: Scope of the tender**

1.1 The Contracting Authority as defined in the Special Regulations of the Invitation to Tender hereby launches an Invitation to tender for the works described in the Tender File and briefly described in the Special Regulations.

**1.2** The bidder retained or the preferred bidder must complete the works within the time- limit indicated in the Special Regulations and which time-limit runs from the date of notification of the Administrative Order.

**1.2** In this Tender File, the term "day" means a calendar day.

**Article 2: Financing**

The source of financing of the works forming the subject of this Invitation to Tender shall be specified in the Special Regulations.

**Article 3: Fraud and corruption**

**3.1** The Contracting Authority requires of bidders and Contractors the strict respect of rules of professional ethics during the award and execution of Public Contracts. By virtue of this principle:

a) The following definitions shall be admitted:

i) Shall be guilty of "corruption" whoever offers, gives, requests or accepts any advantage in view of influencing the action of a public official during the award or execution of a Contract;

ii) Is involved in "fraudulent manoeuvres" whoever deforms or distorts facts in order to influence the award or execution of a Contract;

iii) "Collusive practices" shall mean any form of agreement between two or among several bidders (whether the Contracting Authority is aware or not) aimed at artificially maintaining the prices of bids at levels not corresponding to those resulting from competition;

iv) "Coercive practices" shall mean any form of harm against persons or their property or threats against them in order to influence their action during the award or execution of a Contract.

b) Any proposed award shall be rejected if it is proved that the proposed preferred bidder is directly or through an intermediary, guilty of corruption or is involved in fraudulent manoeuvres, collusive or coercive practices for the award of this Contract.

3.2 TheMinister Delegate at thePresidency in chargeof Public Contractsmay, as a precaution, take a decision ofexclusion from biddingfor a periodnot exceeding two(2) years against anybidderfound guiltyofinfluence peddling,ofconflictsof interest,insider trading, fraud, corruption orproduction of non-genuine documents in the bid,withoutprejudice to criminal proceedingsthat may be broughtagainsthim

**Article 4: Candidates allowed to compete**

4.1 If the Invitation to Tender is restricted, consultation is addressed to all candidates retained after a pre-qualification procedure.

4.2 Generally, the Invitation to Tender is addressed to all entrepreneurs, subject to the following provisions:

(a) a bidder (including all members of a group of enterprises and all sub-Contractors to the bidder) must be from an eligible country, in accordance with the funding agreement.

(b) a bidder (including all members of a group of enterprises and all sub-Contractors to the bidder) must not be in a situation of conflict of interest, subject to disqualification. A bidder shall be judged to be in a situation of conflict of interest if he:

i) is or was associated in the past with an enterprise (or a subsidiary of this enterprise) which provided consultancy services for the conception, preparation of specifications and other documents used within the scope of Contracts awarded for this Invitation to Tender; or

ii) Presents more than one bid within the context of Invitation to Tender, except authorised variants according to article 17, where need be; meanwhile, this does not prevent the participation of sub-Contractors in more than one bid.

iii) The Contracting Authority or Project Owner has financial interests in the capital in a way as to compromise the transparency of the procedures of award of Public Contracts.

(c) The bidder must not have been excluded from bidding for Public Contracts.

(c) A Cameroonian public enterprise may participate in the consultation if it can demonstrate that it is (i) legally and financially autonomous, (ii) managed according to commercial laws and (iii) not under the direct supervisory authority of the Contracting Authority or Project Owner.

**Article 5: Building materials, materials, supplies, equipment and authorised services**

5.1 Building materials, the Contractor's materials, supplies, equipment and services forming the subject of this Contract must originate from countries meeting the criteria of origin defined in the Special Regulations of the Invitation to tender and all expenditure done within the context of the Contract shall be limited to the said building materials, materials, supplies, equipment and services.

5.2 Within the meaning of this 5.1 above, the term "originate" shall designate the place where the goods are extracted, cultivated, produced, manufactured and from where the services originate.

**Article 6: Qualification of bidder**

6.1 As an integral part of their bid, bidders must:

(a) submit a power of attorney making the signatory of the bid bound by the bid; and

(b) provide all information (complete or update information included in their request for pre-qualification which may have changed in the case where the candidates took part in pre-qualification) requested of bidders in the Special Regulations of the Invitation to Tender, in order to establish their qualification to execute the Contract.

Where necessary, bidders should provide information relating to the following points:

(i) The production of certified balance sheets and recent turnovers;
(ii) Access to a line of credit or availability of other financial resources;
(iii) Orders acquired and Contracts awarded;
(iv) Pending litigations;
(v) Availability of indispensable equipment.

6.2 Bids presented by two or more associated undertakings (joint-Contracting) must satisfy the following conditions:

(a) The bid must include all the information listed in article 6(1) above. The Special Regulations must indicate the information to be furnished by the group and that to be furnished by each member of the group;

(b)The bid and the Contract must be signed in a way that is binding on all members of the group;
(c) The nature of the group (joint or several) must be specified in the Special Regulations and justified with the production of a joint venture agreement in due form;
(d)The member of the group designated as the representative will represent all the undertakings vis à vis the Project Owner and Contracting Authority with regard to the execution of the Contract;
(e) In case of joint co-Contracting, the co-Contractors shall share the sums which are paid by the Project Owner into a single account. On the other hand, each undertaking is paid into its own account by the Project Owner where it is joint co-Contracting.

6.3 Bidders must equally present sufficiently detailed proposals to demonstrate that they comply with the technical specifications and execution time-limits set in the Special Regulations of the Invitation to Tender.

6.4 Bidders requesting to benefit from the margin of preference must furnish all the necessary information to prove that they satisfy the eligibility criteria set in article 33 of the General Regulations of the Invitation to Tender.

**Article 7: Visit of works site**

7.1 The bidder is advised to visit and inspect the site and its environs and obtain by himself and under his own responsibility, all the information which may be necessary for the preparation of the bid and the execution of the works. The related cost of the visit of the site shall be borne by the bidder.

7.2 The Project Owner shall authorise the bidder and his employees or agents to enter the premises and the land for the said visit but only on the express condition that the bidder, his employees and agents free the Project Owner, his employees and agents of any responsibility that may ensue and indemnify them if necessary and that they shall remain responsible for any deadly or corporal accident, loss or material damages, costs and fees incurred from this visit.

7.3 The Project Owner may organise a visit of the site of the works during the preparatory meeting to establishing the bids mentioned in article 19 of the General Regulations of the Invitation to Tender.

## B. Tender File

**Article 8: Content of Tender File**

8.1 The Tender File describes the works forming the subject of the Contract, sets the consultation procedure of Contractors and specifies the terms of the Contract. Besides the addendum (addenda) published in accordance with article 10 of the General Regulations of the Invitation to Tender, it includes the following documents:

Document No. 1. The tender notice;
Document No. 2. The General Regulations of the Invitation to Tender;
Document No. 3. The Special Regulations of the Invitation to Tender;
Document No. 4. The Special Administrative Conditions;
Document No. 5. The Special Technical Conditions;
Document No. 6. The schedule of unit prices;
Document No. 7. The bill of quantities and estimates;
Document No. 8. The sub details of unit prices;
Document No. 9. Model documents of the Contract:

a. The execution schedule;
b. Model of forms presenting the equipment, personnel and references;
c. Model bidding letter;

d. Model bid bond;
e. Model final bond;
f. Model of bond of start-off advance;
g. Model of guarantee in replacement of the retention fund;
h. Model Contract;

Document No. 10. Models to be used by bidders;
a. Model Contract;
Document No. 11. Justifications of preliminary studies; to be filled by the Project Owner or Delegated Project Owner;
Document No. 12. List of first grade banking establishments or financial institutions approved by the Minister in charge of Finance authorised to issue bonds for Public Contracts to be inserted by the Contracting Authority.

8.2 The bidder must examine all the regulations, forms, conditions and specifications contained in the Tender File. It is up to him to furnish all the information requested and prepare a bid in compliance with all aspects of the said file.

**Article 9: Clarifications on the Tender File and complaints**

9.1 Any bidder who wants to obtain clarifications on the Tender File may request them from the Contracting Authority in writing or by electronic mail (fax or e-mail) at the Contracting Authority's address indicated in the Special Regulations of the Invitation to Tender and send a copy to the Project Owner. The Contracting Authority replies in writing to any request for clarification received at least fourteen (14) days prior to the deadline for the submission of bids.

A copy of the Contracting Authority's response, indicating the question posed but not mentioning the author, is addressed to all bidders who bought the Tender File.

9.2 Between the publication of the tender notice including the pre-qualification phase of candidates and the opening of bids, any bidder who feels aggrieved in the Public Contracts award procedure may lodge a complaint to the Minister in charge of Public Contracts.

9.3 A copy of the complaint should be addressed to the Contracting Authority and to the body in charge of the regulation of Public Contracts and the chairperson of the Tenders Board.

9.4 The Contracting Authority has five (5) days to react. A copy of the reaction shall be forwarded to MINMAP and the body in charge of the regulation of Public Contracts.

**Article 10: Amendment of the Tender File**

10.1 The Contracting Authority may at any moment, prior to the deadline for the submission of bids and for any reason, be it at his initiative or in reply to a request for clarification formulated by a bidder, amend the Tender File by publishing an addendum.

10.2 Any published addendum shall be an integral part of the Tender File, in accordance with article 8.1 of the General Regulations of the Invitation to Tender and must be communicated in writing or made known by a traceable means to all bidders who bought the Tender File.

10.3 In order to give bidders sufficient time to take account of the addendum in the preparation of their bids, the Contracting Authority may postpone as is necessary, the deadline for the submission of bids, in accordance with provisions of article 22 of the General Regulations of the Invitation to Tender.

## C Preparation of bids

**Article 11: Tender costs**

The candidate shall bear the costs related to the preparation and presentation of his bid and the Contracting Authority and the Project Owner shall in no case be responsible for these costs nor pay for them whatever the evolution or outcome of the Invitation to Tender procedure.

**Article 12: Language of bid**

The bid as well as any correspondence and any document exchanged between the bidder and the Contracting Authority shall be written in English or French. Complementary documents and the forms provided by the bidder may be written in another language on condition that a precise translation into either English or French of the passages concerning the bid is included; in which case for reasons of interpretation, the translation shall be considered to be authentic.

**Article 13: Constituent documents of the bid**

13.1 The bid presented by the bidder shall include the documents detailed in the Special Regulations of the Invitation to Tender, duly filled and put together in three volumes:

a. ***Volume 1: Administrative file***

It includes:

i) all documents attesting that the bidder:
- has subscribed to all declarations provided for by the laws and regulations in force;
- paid all taxes, duties, contributions, fees or deductions of whatever nature;
- is not winding up or bankrupt;
- is not the subject of an exclusion order or forfeiture provided for by the law in force;

ii) The bid bond established in accordance with the provisions of article 17 of the General Regulations of the Invitation to Tender;

iii) the written confirmation empowering the signatory of the bid to commit the bidder, in accordance with the provisions of article 6(1) the General Regulations of Invitation to Tender.

b. ***Volume 2: Technical bid***

*b.1 Information on qualifications*

The Special Regulations list the documents to be furnished by bidders to justify the qualification criteria mentioned in article 6(1) of the Special Regulations of the Invitation to Tender.

*B.2 Methodology*

The Special Conditions of the Invitation to Tender specifies the constituent elements of the technical bid of the bidders especially: a methodological statement on an analysis of the works and specifying the organisation and programme which the bidder intends to put in place or use to execute the works (installations, schedule, Quality Assurance Plan (QAP), sub-Contracting, attestation of visit of the site, where necessary, etc.).

*B.3 Proof of acceptance of conditions of the Contract*

The bidder shall submit duly initialled copies of the administrative and technical documents relating to the Contract, namely:

1. The Special Administrative Conditions (SAC);
2. The Special Technical Conditions (STC).

*B.4 Commentaries (optional)*

A commentary on the technical choices of the project and possible proposals.

c. ***Volume 3: Financial bid***

The Special Regulations specify the elements that will help in justifying the cost of the works, namely:

1. The signed and dated original bid prepared according to the attached model, stamped at the prevailing rate;
2. The duly filled Unit Price Schedule;
3. The duly filled detailed estimates;
4. The sub-details of prices and/or breakdown of all-in prices;
5. The projected schedule of payments, where need be.

In this regard, the bidders will use the documents and models provided in the Tender File, subject to the provisions of article 17(2) of the General Regulations of the Invitation to tender concerning the other possible forms of guarantees.

13.2 If in accordance with the provisions of the Special Regulations of the Invitation to Tender, the bidders present bids for several lots of the same Invitation to Tender, they could indicate rebates offered in case of award of more than one lot.

**Article 14: Bid price**

14.1 Except otherwise stated in the Tender File, the amount of the Contract shall cover all the works described in article 1.1 of the General Regulations of the Invitation to Tender, on the basis of the price schedule and the detailed bill of quantities and estimates presented by the bidder .

14.2 The bidder shall fill the unit prices and totals of all items on the schedule and bill of quantities and estimates.

14.3 Subject to contrary provisions provided for in the Special Regulations and in the Special Administrative Conditions, all dues, taxes and fees payable by the bidder on grounds of the Contract or on any other ground, thirty (30) days prior to the submission of the bids, shall be included in the prices and in the total amount of the bid presented by the bidder.

14.4 If a price revision/updating clause is provided for in the Contract, the date of establishment of the initial price, as well as the price revision/updating conditions for the said price must be specified. This is with the understanding that any Contract of duration less than one (1) year shall not be subject to price revision.

14.5 All unit prices must be justified by sub-details established in accordance with the structure proposed in document 8 of the Tender File.

**Article 15: Currency of bid and payment**

15.1 In case of international invitations to tender, the currencies of the bid shall follow the provisions of either Option A or Option B below, the applicable option being that retained in the Special Regulations of the Invitation to Tender.

**15.2 Option A**: The amount of the bid shall be entirely made in the national currency.

The amount of the bid, unit prices of the price schedule and the prices of the bill of quantities and estimates are completely made in CFA francs in the following manner:

a) Prices shall be entirely drawn in the national currency. The bidder who intends to commit expenditures in other currencies for the execution of the works shall indicate in the annex to the bid the percentage(s) of the amount of the bid necessary to cover the needs in foreign currencies, without exceeding the maximum of the three currencies of member countries of the funding institution of the Contract.

b) The exchange rates used by the bidder to convert his bid into the national currency shall be specified by the bidder in an annex to the bid in compliance with the specifications of the Special Regulations. These rates shall be applied for any payment within the framework of the Contract so that the retained bidder does not bear any change in the exchange rate.

**15.3 Option B:**The amount of the bid shall be directly made in the national and foreign currency at the rates fixed in the Special Regulations.

The bidder shall draw the unit prices of the price schedule and the prices of the bill of quantities and estimates in the following manner:

(a) The prices of inputs necessary for the works which the bidder intends to procure in the Contracting Authority's country shall be in currency of the Contracting Authority's country specified in the Special Regulations and called "national currency";

(a) The prices of inputs necessary for works which bidder intends to procure out of the Contracting Authority's country shall be in the currency of the country of origin of the bidder or of the currency of an eligible member country widely used in international trade.

15.4 The Contracting Authority may request the bidders to explain the needs in national and foreign currencies and to justify that the amounts included in the unit and total prices and indicated in annex to the bids are reasonable; to this end, a detailed statement of their needs in foreign currencies shall be furnished by the bidder.

15.5 During the execution of the works, most of the foreign currency to be paid as part of Contract may be revised by mutual agreement between the Contracting Authority and the entrepreneur in a way as take account of any modification in the foreign currency needs within the context of the Contract.

**Article 16: Validity of bids**

16.1 Bids must remain valid during the period stated in the Special Regulations from the date of submission of the bids fixed by the Contracting Authority, in application of article 22 of the Special Regulations. A bid valid for a shorter period shall be rejected by the Contracting Authority or Delegated Contracting Authority as not being in compliance.

16.2 Under exceptional circumstances, the Contracting Authority may seek the approval of bidders to extend the validity time-limit. The request and the responses that will be given shall be in writing (or by fax). The validity of the bid bond provided for in article 17 of the General Regulations shall equally be extended for a corresponding duration. A bidder may refuse to extend the validity of his bid without losing his bid bond. A bidder who consents to an extension shall not be asked to modify his bid nor shall he be authorised to do so.

16.3 Where the Contract does not include a price revision clause and that the period of validity of bids is extended by more than sixty (60) days, the amounts payable to the bidder retained shall be updated by application of the related formula featuring in the request for extension that the Contracting Authority addressed to bidders.

The updating period shall run from the date of overrun of sixty (60) days to the date of notification of the Contract or the Administrative Order for start of execution of works by the retained bidder, as specified in the Special Administrative Conditions. The effect of updating shall not be taken into account for purposes of evaluation of bids.

**Article 17: Bid bond**

17.1 In application of article 13 of the General Regulations, the bidder shall furnish a bid bond of the amount specified in the Special Regulations and which bid bond shall be a full part of his bid.

17.2 The bid bond must conform to the model presented in the Tender File; other models may be authorised subject to the prior approval of the Contracting Authority. The bid bond will remain valid for thirty (30) days beyond the original date set for the validity of bids or any other validity time-limit requested by the Contracting Authority and accepted by the bidder, in accordance with the provisions of article 16 (2) of the General Regulations.

17.3 Any bid without an acceptable bid bond shall be rejected by the Tenders Board as not in conformity. The bid bond of associated enterprises must be established in the name of the group submitting the bid and mention each member of the associated grouping.

17.4 The bid bonds of bidders who are not retained shall be returned within fifteen (15) days after publication of the award result.

17.5 The bid bond of the successful bidder shall be released as soon as the latter would have signed the Contract and furnished the required final bond.

17.6 The bid bond may be seized:

(a) if the bidder withdraws his bid during the period of validity;
(b) If the retained bidder:
i) fails in his obligation to register the Contract in application of article 38 of the General Regulations;

ii) fails in his obligation to furnish the required final bond in application of article 38 of the General Regulations;

iii) Refuses to receive notification of the Administrative Order to commence execution.

**Article 18: Varying proposals of bidders**

18.1 Where the works can be executed within variable deadlines, the Special Regulations shall specify these deadlines and shall indicate the method retained for the evaluation of the completion deadline proposed by the bidder within the specified deadlines. Bids that propose deadlines beyond those specified shall be considered as not being in conformity.

18.2 Except in the case mentioned in article 18(3) below, bidders wishing to offer technical variants must first assess the basic solution of the Contracting Authority as described in the Tender File and furnish in addition all the information which the Contracting Authority needs for a complete evaluation of the proposed variant, including the plans, calculations, technical specifications, sub-details of prices and proposed construction methods and all other useful information. If necessary, the Contracting Authority will examine only the technical variants of the bidder whose bid is in compliance with the basic solution has been evaluated as the lowest bid.

18.3 When according to the Special Regulations the bidders are authorised to directly submit the technical variants for certain parts of the works, these parts of the works must be described in the technical specifications. Such variants shall be evaluated on their own merit in accordance with the provisions of article 31(2) (g) of the General Regulations.

**Article 19: Preparatory meeting to the establishment of bids**

19.1 Except otherwise stipulated in the Special Regulations, a bidder may be invited to take part in a preparatory meeting which will hold at the date and place indicated in the Special Regulations.

19.2 The subject of the preparatory meeting shall be to furnish clarifications and answer any questions which may be raised at this stage.

19.3 As much as possible, the bidder is requested to submit any question in a way as to reach the Contracting Authority at least one week before the meeting The Contracting Authority may not reply to questions received too late. In this case, the questions and answers shall be transmitted according to the methods set in article 19(4) below.

19.4 The minutes of the meeting, including the text of the questions asked and the replies given, including questions prepared after the meeting, shall be forwarded immediately to everyone who bought

the Tender File. Any modification of documents of the Tender File listed in article 8 of the General Regulations which may prove to be necessary at the end of the preparatory meeting shall be done by the Contracting Authority by publishing an addendum in accordance with the provisions of article 10 of the General Regulations and not through the minutes of the preparatory meeting.

19.5 The fact that a bidder does not attend a preparatory meeting for the establishment of bids shall not be a reason for disqualification.

**Article 20: Form and signature of bid**

20.1 The bidder shall prepare an original of the constituent documents described in article 13 of the General Regulations in a volume clearly indicated "**ORIGINAL**". In addition, the bidder shall submit the number required in the General Regulations, bearing **"COPY"**. In case of discrepancy, the original shall be considered as authentic.

20.2 The original and copies of the bid must be typed or written in indelible ink (photocopies shall be accepted in the case of copies) and shall be signed by the person(s) duly empowered to sign on behalf of the bidder, in accordance with article 6(1a) or 6(2c) of the General Regulations, as the case may be. All the pages of the bid containing alterations or changes must be initialled by the signatory (ies) of the bid.

20.3 The bid shall be bear no modification, suppression or alteration unless such corrections are initialled by the signatory (ies) of the bid.

## D. SUBMISSION OF BIDS

**Article 21: Sealing and marking of bids**

21.1 The bidder shall seal the original and each copy of the bid in separate envelopes (internal envelopes) by marking on these envelopes "**ORIGINAL**" and "**COPY**", as the case may be. The envelopes shall then be placed in another envelope which will equally be sealed but which will not give any indication regarding the identity of the bidder.

21.2 The external and internal envelopes:

a) Should be addressed to the Contracting Authority at the address indicated in the Special Regulations;

b) should bear the name and identification number of the project as indicated in the Special Regulations and bear the inscription "***TO BE OPENED ONLY DURING THE BID-OPENING SESSION***" as specified in the Special Regulations.

21.3 The internal envelopes should equally carry the name and address of the bidder in a way as to enable the Contracting Authority return the sealed bid if it is late in accordance with article 23 and 24 of the General Regulations.

21.4 If the external envelope is not sealed and marked as indicated in paragraphs 21(1) and 21(2) above, the Contracting Authority shall not be responsible if the bid is misplaced or opened prematurely.

**Article 22: Date and time-limit for submission of bids**

22.1 The bids must be received by the Contracting Authority at the address specified in article 21(2) of the Special Regulations not later than the date and time stated in the Special Regulations.

22.2 The Contracting Authority may, at his discretion, postpone the deadline set for the submission of the bids by publishing an addendum in accordance with the provisions of article 10 of the General Regulations. In this case, all the rights and obligations of the Contracting Authority and bidders previously governed by the initial date will henceforth be governed by the new date.

**Article 23: Late bids**

Any bid received by the Contracting Authority beyond the deadline for the submission of bids in accordance with article 22 of the General Regulations shall be declared late and consequently rejected.

**Article 24: Modification, substitution and withdrawal of bids**

24.1 A bidder may modify or withdraw his bid after submitting it, on condition that the written notification of the modification or withdrawal is received by the Contracting Authority prior to the end of the time-limit prescribed for the submission of the bids. The said notification must be signed by an authorised representative in application of article 20(2) of the General Regulations. The modification or the corresponding replacement bid must be attached to the written notification. As the case may be, the envelopes must bear the inscription **"WITHDRAWAL"**, and **"REPLACEMENT BID"** or **"MODIFICATION".**

24.2 Notification of modification, replacement or withdrawal of the bid by the bidder should be prepared, sealed, marked and forwarded in accordance with the provisions of article 21 of the General Regulations. Withdrawal may equally be notified by telex but should in this case be confirmed by a duly signed written notification whose date, post mark being authentic, shall not be posterior to the time-limit set for the submission of bids.

24.3 In application of article 24(1), bids being requested to be withdrawn by bidders shall be returned to them unopened.

24.4 No bid may be withdrawn during the interval between the submission of bids and the expiry of the validity of bids specified by the model tender. The withdrawal of a bid by a bidder during this interval may lead to the confiscation of the bid bond in accordance with the provisions of article 17(6) of the General Regulations.

## E. Opening of envelopes and evaluation of bids

**Article 25: Opening of envelopes and petitions**

25.1 The BALI Council Tenders Board shall open the envelopes in single or double phases and in the presence of the representatives of bidders who wish to attend at the date, time and address specified in the Special Regulations. Representatives of bidders shall sign a register attesting to their presence.

25.2 Firstly, envelopes marked "**withdrawal**" shall be opened and the contents announced to the hearing of everyone, while the envelope containing the corresponding bid shall be returned to the bidder unopened. Withdrawal shall be allowed only if the corresponding notification contains a valid empowerment of the signatory to request this withdrawal and if this notification is read to the hearing of everyone. Then the envelopes marked "**Replacement** bid" are opened and announced to the hearing of everyone and the new corresponding bid substituted for the preceding one which will be sent to the bidder concerned unopened. The replacement of the bid shall only be allowed if the corresponding notification contains a valid empowerment of the signatory requesting the replacement and read to the hearing of everyone. Lastly, the envelopes marked "**modification**" shall be opened and their contents read to the hearing of everyone with the corresponding bid. The modification of the bid shall only be allowed if the corresponding notification contains a valid empowerment of the signatory requesting the modification and read to the hearing of everyone. Only bids which were opened and announced to the hearing of everyone during the opening of bids shall then be evaluated.

25.3 All envelopes shall be opened successively and the name of the bidder announced aloud as well as the possible modification mentioned, the price offered, including any rebates [*in case of opening of financial bids*] and any variant, where necessary, the existence of a guarantee of the bid if it is required and any other details which the Contracting Authority deems useful to be mentioned. Only rebates and variants of bids announced to the hearing of everyone during the opening of bids shall be submitted for evaluation.

25.4 Bids (and modifications received in accordance with the provisions of article 24 of the General Regulations) which were not opened and read to the hearing of everyone during the bid-opening session for whatever reason, shall not be submitted for evaluation.

25.5 Bid-opening minutes are recorded on the spot mentioning the admissibility of bids, their administrative regularity, prices, rebates and time-limits as well as the composition of the Evaluation sub-committee. A copy of the said minutes to which is attached the attendance sheet is handed over to all the participants at the end of the session.

25.6 At the end of each bid-opening session, the chairperson of the Tenders Board immediately hands over to the focal point designated by the body in charge of regulation of Public Contract an initialled copy of the bids presented by bidders.

25.7 In case of petition as provided for by the Public Contracts Code, it should be addressed to the Minister Delegate in charge of Public Contracts with a copies to the body in charge of the regulation of Public Contracts, the head of structure to which is attached the Tenders Board concerned.

It must reach within a maximum deadline of three (3) working days after the opening of bids in the form of a letter to which is obligatorily attached a sheet of the petition form duly signed by the petitioner and possibly by the chairperson of the Tenders Board.

The Independent Observer attaches to his report the sheet that was handed to him, including any related commentaries or observations.

**Article 26: Confidential nature of the procedure**

26.1 No information relating to the examination, clarification, evaluation and comparison of bids and verification of the qualification of the bidders and the recommendation for the award shall be given to bidders or to any person not concerned with the said procedure as long as the preferred bidder has not been made public, subject to the disqualification of the bid of the bidder and suspension of the authors from all activities in the domain of Public Contracts.

26.2 Any attempt by a bidder to influence the Tenders Board or the Evaluation sub-committee of bids or the Contracting Authority in its award decision may lead to the rejection of his bid.

26.3 Notwithstanding the provisions of paragraph 26.2 above, between the opening of bids and the award of the Contract, if a bidder wishes to enter into contact with the Contracting Authority for reasons having to with his bid may do so in writing.

**Article 27: Clarifications on the bids and contact with the Contracting Authority**

27.1 To ease the examination, evaluation and comparison of bids, the Tenders Board may, if it so desires, request any bidder to give clarifications on his bid. This request for clarification and the response thereto are formulated in writing but no change on the amount or content of the bid is sought, offered or authorised, except it is necessary to confirm the correction of calculation errors discovered by the Evaluation Sub-committee during the evaluation in accordance with the provisions of article 30 of the General Regulations.

27.2 Subject to the provisions of paragraph 1 above, bidders shall not contact members of the Tenders Board and the Evaluation Sub-committee for questions related to their bids, between the opening of envelopes and the award of the Contract.

**Article 28: Determination of compliance of bids**

28.1 The Evaluation sub-committee shall carry out a detailed examination of bids to determine if they are complete, if the required guarantees are furnished, if the documents were correctly signed and if generally the bids are in proper order.

28.2 The Evaluation sub-committee shall determine if the bid is essentially in compliance with the conditions fixed in the Tender File based on the content without recourse to external elements of proof.

28.3 A bid that complies with the Tender File shall essentially be a bid that respects all the terms, conditions and specifications of the Tender File, without substantial divergence or reservation. A substantial divergence or reservation is that:

i) which substantially limits the scope, quality or realisation of the works;

ii) which substantially limits, contrary to the Tender File, the rights of the Contracting Authority or his obligations in relation to the Contract;

iii) Whose correction would unjustly affect the competitiveness of the other bidders who presented bids that essentially complied with the Tender File?

28.4 If a bid is essentially not in compliance, it shall be rejected by the competent Tenders Board and shall not subsequently be rendered in compliance.

28.5 The Contracting Authority reserves the right to accept or reject any modification, divergence or reservation. Modifications, divergences, variants and other factors which are beyond the requirements of the Tender File shall not be considered during the evaluation of bids.

**Article 29: Qualification of the bidder**

The Evaluation sub-committee shall ensure that the successful bidder retained for having submitted a bid substantially in compliance with the provisions of the Tender File, fulfils the qualification criteria stipulated in article 6 of the Special Regulations. It is essential to avoid any arbitrariness in determining qualification.

**Article 30: Correction of errors**

30.1 The Evaluation sub-committee shall verify bids considered essentially in compliance with the Tender File to correct the possible calculation errors. The Evaluation sub-committee shall correct the errors in the following manner:

(a) where there is an incoherence between the unit price and the total obtained by multiplying the unit price by the quantity, the unit price being authentic, the total price shall be corrected, unless the Evaluation sub-committee judges that it is a gross error of decimal point in the unit price in which case the total price as presented shall be authentic and the unit price corrected.

(b) If the total obtained by addition or subtraction of the totals is not exact, the sub totals shall be considered authentic and the total corrected.

(c) Where there is a difference between the price indicated in letters and in figures, the amount in letters shall be considered authentic, unless the amount is linked to an arithmetical error confirmed by the sub-detail of the said price, in which case the amount in figures shall prevail subject to paragraphs (a) and (b) above.

30.2 The amount featuring in the bid shall be corrected by the Evaluation sub-committee, in accordance with the error correction procedure above and with confirmation by the bidder, the said amount shall be deemed to commit him.

30.3 If the bidder who presented the bid evaluated as the lowest refuses the correction thus carried out, his bid shall be rejected and the bid bond may be seized.

**Article 31: Conversion into a single currency**

31.1 To facilitate the evaluation and comparison of bids, the Evaluation sub-committee shall convert the prices of bids expressed in various currencies into those in which the bid is payable in CFA francs.

31.2 The conversion shall be done using the selling rate fixed by the Bank of Central African States (BEAC) under the conditions defined by the Special Regulations.

**Article 32: Evaluation and comparison of financial bids**

32.1 Only bids considered as being in compliance, as per the provisions of article 28 of the General Regulations, shall be evaluated and compared by the Evaluation sub-committee.

32.2 By evaluating the bids, the Evaluation Sub-committee shall determine for each bid the evaluated amount of the bid by rectifying the amount as follows:

a) By correcting any possible error in accordance with the provisions of article 30.2 of the General Regulations;
b) By excluding projected sums and where necessary provisions for unforeseen occurrences featuring in the bill of quantities and estimates but by adding the amount of works done under State supervision where they are coasted in a competitive manner as specified in the Special Regulations.
c) By converting into a single currency the amount resulting from the rectifications (a) and (b) above, in accordance with the provisions of article 31(2) of the General Regulations;
d) By appropriately adjusting any other modification, divergence or quantifiable reservation on technical or financial basis.
e) By taking into consideration the various execution time-limits proposed by the bidders, if they are authorised by the Special Regulations;
f) If need be, in accordance with the provisions of article 13(2) of the General Regulations and the Special Regulations by applying the rebates offered by the bidder for the award of more than one lot, if this Invitation to Tender is launched simultaneously for several lots.
g) If need be, in accordance with the provisions of article 18(3) of the Special Regulations and the Technical Specifications, the proposed technical variants, if they are permitted, shall be evaluated on their own merit and independently of the fact that the bidder offered or not a price for the technical solution specified by the Contracting Authority in the Special Regulations.

32.3 The estimated effect of price revision formulae featuring in the GAC and SAC applied during the period of execution of the Contract shall not be considered during the evaluation of bids.

32.4 If the bid judged the lowest bid is considered abnormally low or strongly unbalanced in relation to the estimates of the Project Owner for the works to be executed in this Contract, the Tenders Board may, from the sub-details of prices furnished by the bidder for any element or all the elements of the bill of quantities and estimates, verify if these prices are compatible with the construction methods and proposed calendar. In the case where the justifications presented by the bidder are not satisfactory, the Contracting Authority may reject the bid after the technical opinion of the Public Contracts Regulatory Agency.

**Article 33: Preference granted national bidders**

National Contractors shall benefit from a margin of national preference during the evaluation of bids as provided for in the Public Contracts Code.

**Article 34: Award**

34.1 The Contracting Authority shall award the Contract to the bidder whose bid was judged essentially in compliance with the Tender File and who has the required technical and financial capacities to execute the Contract satisfactorily and whose bid was evaluated as the lowest by including, where necessary, proposed rebates

34.2 If, according to article 13(2) of the General Regulations, the Invitation to tender comprises several lots, the lowest bid shall be determined by evaluating this Contract with other lots to be awarded concurrently, by taking into account the rebates offered by the bidders in the case of more than one lot.

34.3 Any award of Contract shall be made to the bidder fulfilling the technical and financial capacities required resulting from the evaluation criteria and presenting the bid evaluated as the lowest.

**Article 35: The right by the Contracting Authority to declare an Invitation to Tender unsuccessful or cancel a procedure**

The Contracting Authority reserves the right to cancel a procedure of Invitation to tender after the authorisation of the Minister Delegate at the Presidency in charge of Public Contracts where the bids have been opened or to declare an Invitation to tender unsuccessful after the advice of the competent Tenders Board, without any claims being entertained.

**Article 36: Notification of award of the Contract**

Before the expiry of the validity of the bids set in the Special Regulations, the Contracting Authority shall notify the preferred bidder by telecopy confirmed by registered mail or by any other means that his bid was retained. This letter will indicate the amount the Project Owner will pay the Contractor to execute the works and the execution time-limit.

**Article 37: Publication of results of award and petitions**

37.1 The Contracting Authority shall communicate to any bidder or administration concerned, upon request addressed to it within a maximum deadline of five (5) days after publication of the award results, the Independent Observer's report as well as the minutes of the award session of the related Contract to which shall be attached the evaluation report of the bids.

37.2 The Contracting Authority is bound to communicate the reasons for the rejection of bids of the bidders concerned who so request.

37.3 After publication of the award results, bids that are not withdrawn within fifteen (15) days shall be destroyed, without any claims for compensation being entertained. Only the copy destined for the body in charge of regulation shall be kept.

37.4 In case of petition, it should be addressed to the Public Contracts Authority, with copies to the body in charge of the regulation of Public Contracts, the Contracting Authority and the chairperson of the Tenders Board concerned.

It must take place within a maximum deadline of five (5) working days after the publication of the results.

**Article 38: Signing of the Contract**

38.1 After publication of the results, the draft Contract subscribed by the successful bidder is submitted to the Tenders Board for examination and where applicable, to the Minister in charge of Public Contracts for prior endorsement.

38.2 The Contracting Authority has a deadline of seven (7) days to sign the Contract from the date of acceptance of the draft Contract examined by the competent Tenders Board and subscribed by the successful bidder and where applicable, the endorsement of the Minister in charge of Public Contracts.

38.3 The Contract must be notified to the successful bidder within five (5) days of its date of signature.

**Article 39: Final Bond**

39.1 Within twenty (20) days of the notification by the Contracting Authority, the Contractor shall furnish the Project Owner with a final bond, to guarantee the complete execution of the works.

39.2 The bond whose rate varies between 2 and 5 percent of the amount of the Contract inclusive of all taxes, may be replaced by a guarantee from a banking establishment approved according to the instruments in force with the Project Owner as beneficiary or by a joint or several guarantee.

39.3 Small and medium-sized enterprises (SME) constituted of national capital and managed by nationals may, in lieu of the guarantee, provide a statutory lien or a bond issued by a banking establishment or first rate financial institution approved in accordance with the instruments in force.

39.4 Failure to produce the final bond within the prescribed time limit shall likely cause the termination of the Contract under the terms laid down in the General Administrative Conditions.

# DOCUMENT No. 3: SPECIAL REGULATION OF THE INVITATION TO TENDER (SRIT)

**Special regulations of the Invitation to Tender**

| References of the General regulations | General |
|---|---|
| 1.1 | **Definition of works:**<br>THE CONSTRUCTION OF A REINFORCED CONCRETE MOM BRIDGE LINKING NJENKA AND MOM ALONG THE NJENKA-MOM ROAD AND THE CONSTRUCTION OF MBATMANDET BRIDGE LINKING MBATMANDET-FONTUH ROAD IN BALI COUNCIL AREA, MEZAM DIVISION OF THE NORTH WEST REGION BY EMERGENCY PROCEDURE |

| | |
|---|---|
| | **Name and address of the Contracting Authority:** The Lord Mayor of BALI Council.<br>**Reference of Invitation to Tender:N°...../ONIT/BC/BCITB/2026**<br>**OF ...../2026** |
| 1.2 | Execution deadline: (120) days |
| 2.1 | **Source of financing**<br>Works which form the subject of this Invitation to Tender is financed by the 2026 Public Investment Budget of the MINTP. |
| 4.1 | List of pre-qualified candidates, not applicable |
| 5.1 | Origin of building materials, equipment, materials and supplies: The materials will generally be from natural sources in Cameroon. |

**6.1 Evaluation criteria**

The bids shall be evaluated according to the main criteria as follows:

**C. Eliminatory criteria**

1. Absence or insufficient bid bond
2. Absence of a document in the administrative file;
3. False declaration or falsified documents;
4. A bid with the external envelope carrying a sign or mark leading to the identification of the bidder;
5. Non-compliance with model bid
6. Incomplete financial file;
7. Absence of a quantified unit price;
8. Non respect of **75%** of essential criteria;
9. Name of company suspended by MINMAP
10. Financial situation below a third of the estimated cost
11. Absence of the certificate of categorisation
12. Absence of CDEC Receipt of deposit

**D. Essential criteria**

1- General presentation of the Tender Files;
2- Financial capacity;
3- References of the company in similar achievements;
4- Quality of the personnel;
5- Technical organization of the works;
6- Safety measures on the site;
7- Logistics;
8- Attestation and report of site visit signed by the Contractor;
9- Special Technical Clauses initialed in all the pages and signed at the last page;
10- Special Administrative Clauses completed and initialed in all the pages and signed at the last page

The criteria relating to the qualification of candidates could be indicative on the following:

The essential criteria are subjected to minima whose detail is given in the Special Tender Regulation (RPAO).

This evaluation will be done in a purely binary way (yes) or (no) with an acceptable minimum from at least 75% of the essential criteria taken into account.

The Contract will be awarded to the bidder who would have proposed the offer with the lowest amount, in conformity with the regulations of the Tender Documents and having satisfied to **100%** of the eliminatory criteria and at least **75%** of the essential criteria

**ARTICLE 6: Language of the bids:**

The offer like any correspondence and all documents concerning the tender, exchanged between the Tenderer and the Project Owner will be written in French or English. The complementary documents and the printed papers form provided by the Bidder can be written in another language in condition of being accompanied by a precise translation in French or English; in which case and for purposes of interpretation of the offer, the translation will be taken.

**PRESENTATION OF THE BID**

The bids prepared in English or French and in Seven (07) copies with one (01 original and six (06) copies marked thus, shall be presented in three (03) volumes as follows:

A) **Administrative Documents**
B) **Technical Documents**
C) **Financial Documents**

**5.1 External envelope.**

Each bidder shall seal these three (03) envelopes (A, B and C) in one common envelope on which shall be written.

**<< OPEN NATIONAL INVITATION TO TENDER**
**N° ..../ONIT/BC/BCITB/2026OF .... / ..../ 2026**
**THE CONSTRUCTION OF A REINFORCED CONCRETE MOM BRIDGE LINKING NJENKA AND MOM ALONG THE NJENKA-MOM ROAD AND THE CONSTRUCTION OF MBATMANDET BRIDGE LINKING MBATMANDET-FONTUH ROAD IN BALI COUNCIL AREA, MEZAM DIVISION OF THE NORTHWEST REGION BY EMERGENCY PROCEDURE**

***"TO BE OPENED ONLY DURING THE BID-OPENING SESSION"***

**NB. Pursuant to circular letter No.00005/LC/MINMAP/CAB of 26/12/2023, bidders with certified true copies of the certificate of categorisation shall not submit certain documents of the technical file as elaborated in the text of application of categorisation certificate**

**8.2 Internal envelopes**

Three (03) internal envelopes must be sealed in an external envelope.

The first internal envelope shall be labeled;

**<<ENVELOPE A: ADMINISTRATIVE DOCUMENTS>>** and shall contain the administrative documents of the enterprise. These documents shall be original or copies certified by competent authorities not more than three months.

**ADMINISTTRATIVE DOCUMENTS.**

| DOC N° | DESCRIPTION |
|---|---|
| A.1 | Certified Copy of the Business Registration, not more than three months old. |
| A.2 | Declaration of intention to tender stamped with the tariff in force (see model). |
| A.3 | Certificate of non-bankruptcy established by the Court of 1st instance or the Chamber Commerce, Industry and Trade of the place of residence of the bidder, not more than three (03) months. |
| A.4 | Attestation of bank account of the bidder, issued by a first rate-bank approved by the Ministry in charge of Finance or by a foreign bank the first order not more than three months. |
| A.5 | Purchase receipt of Tender File issued by BALI council treasury of 150.000 FCFA |
| A.6 | A bid bond of **2,980,000 FCFA** (two million nine hundred and eightythousandFCFA) issued by a first rate-bank approved by the Ministry in charge of Finance in conformity with COBAC conditions. The said guarantee must be accompanied by a consignment receipt issued by the **"Caisse Depôt et Cosignation (CDEC)** in accordance with Circular letter N° 0000019/L/MINMAP of 5th June 2024 relating to the constitution of deposits, retention, restitution and deconsignment of bonds on public contracts |
| A.7 | An attestation of non-exclusion from Public Contracts issued by the Public Contract Regulatory Board (ARMP) |
| A.8 | An Attestation of the National Social Insurance Fund stating that the bidder has met all his obligations vis a vis the Fund; the attestation should be valid within the specified time |
| A.9 | Certificate of fiscal conformitystamped with the tariff in force |
| A.10 | valid taxpayers card stamped with the tariff in force |
| A 11 | location plan of the enterprise stamped with the tariff in force |
| A 12 | Certificate of categorisation on Road sub sector of works |

| | |
|---|---|
| A 13 | Power of attorney if necessary |
| A 14 | Group agreement if need be |

The second Internal Envelope shall be labeled **<<ENVELOPE B: TECHNICAL DOCUMENT>>** and shall contain the following:

| | | | |
|---|---|---|---|
| **B.1** | **General presentation of the Tender Files** | | |
| | - Document spirally bound or slotted<br>- Table of content page<br>- Colour sheets separation apart from white<br>-page numbering<br>- neatness and clarity of documents<br>- Presentation of documents in the order given in this tender | | |
| **B.2** | **LIST OF REFERENCES OF THE ENTERPRISE IN THE SIMILAR JOBS** | | |
| B.2.1 | List of references of the enterprise in similar jobs justified by registered Contracts (first and last pages with BOQ) and certified minutes of acceptance or attestation of clearances of works executed. (minutes of final acceptance for up to 2026 projects)<br>Minimum acceptable: **02** Contracts realized in the domain of Road construction over the past 10 years | | |
| B.2.1.1 | 1st Reference | | |
| B.2.1.2 | 2nd Reference | | |
| **B.** | **QUALIFICATION AND EXPERIENCE OF SUPERVISORY STAFF** | | |
| | **01 works supervisor Masters in civil or rural Engineering** | | |
| | Qualification of the works supervisor: Mastersin Civil or Rural Engineering (BAC +4) in NOCI | | |
| | Professional experience of the project engineer ≥ 05 years (signed CV)<br>- CV signed by the candidate,<br>- A certified copy of the technical diploma<br>- Presentation of originals<br>- An attestation of availability signed by the candidate<br>- NIC Certified | | |
| B.3.2 | **01 Site foreman(Bsc in Civil or Rural Engineering)** | | |
| | Qualification of the Site foreman: (BACC+ 3in Civil or Rural Engineering or equivalent ) | | |
| | Professional experience of the Site foreman ≥ 03 years (signed CV)<br>A certified copy of<br>- CV signed by the candidate,<br>- A certified copy of the technical diploma<br>- Presentation of originals<br>- An attestation of availability signed by the candidate<br>- NIC Certified | | |
| **B.4** | **TECHNICAL PROPOSALS** | | |
| B.4.2 | Organigram of the project | | |
| B.4.3 | Technical description of works to be executed by task | | |
| B.4.5 | Quality control method | | |
| B.4.7 | Environmental protection measures | | |
| B.4.8 | Security and safety at the site | | |
| B.4.9 | Duration of execution in respect with the Tender File | | |
| B.4.10 | Attestation of site visit signed by the Contractor | | |

| | | | |
|---|---|---|---|
| B.4.11 | Comprehensive report of site visit signed by the company administrator with pictures | | |
| **B.5** | **LOGISTICS (Equipment put aside for this project)** | | |
| B.5.1 | Prove of ownership or rental of a bulldozer | | |
| B.5.2 | Prove of ownership or rental of a front end loader | | |
| B.5.3 | Prove of ownership or rental of a Grader | | |
| B.5.4 | Prove of ownership or rental of a pick-up or other vans | | |
| B.5.5 | Prove of ownership or rental of a dump truck | | |
| B.5.6 | Prove of ownership or rental of a Concrete mixer | | |
| B.5.7 | Prove of ownership or rental of a manual compactor | | |
| B.5.8 | Assorted Masonry tools | | |
| B.5.9 | Assorted Carpentry tools | | |
| **B.6** | **FINANCIAL CAPACITY** | | |
| B.6.1 | An attestation of financial capacity (solvency) of the enterprise issued by a 1st class bank located in any area in Cameroon and approved by the Ministry of Finance and respect COBAC conditions. | | |
| **B.7** | Special Technical Clauses initialed in all the pages and last page signed | | |
| **B.8** | Special Administrative Clauses completed and initialed in all the pages and last page signed | | |

**ENVELOPE C- FINANCIAL FILE**

| No. | DESIGNATION. |
|---|---|
| C1 | A submission letter, signed, dated and stamped by the bidder |
| C2 | Completed and signed frame work of unit prices. |
| C3 | Signed Bills of quantities and cost estimates indicating the total amount without taxes (HT) and with taxes (TTC) |
| C4 | Sub details of unit prices |

- The bidders will use for this purpose the documents and models envisaged in the Tender Documents, subject to the provisions of Article 19.2 of the RGAO concerning the other possible forms of bid bond.
- The various parts of the same file must be separated with colour guides form as well in the original as in the copies, so as to facilitate its examination

**Supply price**

**ARTICLE 8: Currency of payment**

This National Invitation to tender is awarded on total and Contractual price, inclusive of all taxes, firm and non-revisable for the whole of the works and the equipment defined in the present Invitation to Tender.

The corresponding amount will be calculated inclusive of all taxes and the prices will be obligatorily expressed in francs CFA.

The unit Schedule price expressed out in figures and letters and in six (06) copies will be joined to the offer. In the event of error between the prices in figures and letters, the latter will precede and be used as a basis of calculation of the amount of the offer.

The establishment of the prices will be done on the basis of economic condition into force in Republic of Cameroon at the handover date of the offers.

**ARTICLE 9:Transport and delivery**

The materials for work must be protected during transportation through packaging whether by air, railway or road according as the case may be. The conditions of storage must be of tropical type.

**ARTICLE 10:Guarantee and retention guarantee**

**10.1 Provisional guarantee**

The amount of the provisional guarantee or guarantee of tender is fixed at**2,980,000FCFA**(Two million nine hundred and eighty thousandFCFA).

The time of validity of this guarantee is sixty (90) days as from the date of depositing of the offers.

**10.2 Final Bond**

The final Bond is fixed at two percent (**2%**) of the initial amount of the services envisaged in the country.

It could be replaced by a guarantee personal and interdependent of a banking house approved by the Ministry of Finances following COBAC conditions.

It will have to be made up in the twenty (20) days following the notification of the signature of the Contract in a bank approved by the Minister in charge of Finances.

**10.3 GuaranteeRetention**

Guarantee Retention of ten percent (**10%**) will be operated on amount including all taxes of the Contract. The corresponding sum will be paid or released with the final acceptance of work and upon demand by the contractor.

**ARTICLE 11: Period of validity of the offers**

The bidder will remain committed to his offer for sixty (60) days as from the handover date of the offers.

If at the end of this period, the Contract were not notified to him, the bidder will be able, either to cancel his offer, or to ask for a new negotiation of the unit prices.

**ARTICLE 12: The number of copies of the offer which must be filled and sent**

The tender, as all the parts accompanying it will have to be given in seven (0 7) copies, including one (01) original and six (06) copies. The bidder will present his file inside a sealed outer jacket being marked:

**<< OPEN NATIONAL INVITATION TO TENDER**
**N° ...../ONIT/BC/BCITB/2026OF ..../..../2026**
**THE CONSTRUCTION OF A REINFORCED CONCRETE MOM BRIDGE LINKING NJENKA AND MOM ALONG THE NJENKA-MOM ROAD AND THE CONSTRUCTION OF MBATMANDET BRIDGE LINKING MBATMANDET-FONTUH ROAD IN BALI BALI COUNCIL AREA, MEZAM DIVISION OF THE NORTHWEST REGION BY EMERGENCY PROCEDURE**

**ARTICLE 13: Date and latest time of deposit of offers**

The offers will have to arrive under closed fold and seal latest ...../2026 **at 10: AM**, by mail registered with acknowledgement of delivery or by deposit against a receipt.

**ARTICLE 14: Opening of the tenders**

The opening of the folds will be carried out in the conference room of the BALI Council on...../2026 **as from 11:00 AM**, by the BALI Council Tenders Board sitting in the presence of the duly elected bidders or their representatives and having a good knowledge of the file.

## AWARD OF THE CONTRACT

**ARTICLE 15: Award of the Contract**

The Tenders Board will propose to the Contracting Authority to award the Contract to the bidder who will have presented the offer with the lowest offer, essentially conforming to the regulations the Tender File, having satisfied to **100% of all the eliminatory criteria and at least 75% of the essential criteria** taken into account.

The decision carrying attribution of the Contract will be published by way of press release or any other means of publication of use in the Administration.

If the Contract passed on the basis of technical alternative suggested by the bidder, the Contracting authority reserves the right to introduce all the provisions there allowing him to guarantee itself against the real overrun costs of the alternative compared to his estimate of origin. In the absence of these last precise details, any additional charge due to an alternative will be inadmissible.

To this end, it is specified that a bidder cannot claim to be compensated, if it is not taken action on his offer.

The Contracting authority reserves the right not to take action on an Invitation to Tender, if it did not obtain a proposal which appears acceptable to him.

**ARTICLE 16: COMMENCEMENT OF WORK:**

Before the commencement of work the Contractor must be installed on the site by the following:

- The CONTRACTING AUTHORITY OR HIS REP;
- DDMINTP MEZAM CONTRACT ENGINEER OR HIS REP.
- DDMINMAP/ MEZAM OR HIS REP
- DDMINEPAT/MEZAM OR HIS REP
- CHIEF OF TECHNICAL SERVICE BALICOUNCIL
- CONTRACTOR OR HIS REP

# DOCUMENT No. 4: SPECIAL ADMINISTRATIVE CONDITIONS (SAC)

## Table of content


**Chapter I: General**

Article 1 - Subject of the Contract
Article 2 - Award procedure
Article 3 - Definitions and duties (article 2 of GAC supplemented)
Article 4 - Language, applicable law and regulations
Article 5 - Constituent documents of the Contract (article 4 of GAC)
Article 6 - General applicable instruments
Article 7 - Communication (GAC articles 6 and 10 supplemented)
Article 8 - Administrative Orders (article 8 of GAC supplemented)
Article 9 - Contracts with conditional phases (article 15 of GAC)
Article 10 - Contractor's personnel (article 15 of GAC supplemented)

**Chapter II: Financial conditions**

Article 11 - Guarantees and bonds (articles 29 and 41 of GAC supplemented)
Article 12 - Amount of Contract (articles 18 and 19 supplemented)
Article 13 - Place and method of payment
Article 14 - Price variation (article 20 of GAC)
Article 15 - Price revision formulas
Article 16 - Price updating formulas (article 21 of GAC)
Article 17 - Work under State supervision (article 22 of GAC supplemented)
Article 18 - Evaluation of works (article 23 supplemented)
Article 19 - Evaluation of supplies (article 24 of GAC) supplemented)
Article 20 - Advances (article 28 of GAC)
Article 21 - Payments for the works (articles 26, 27 and 30 of GAC supplemented)
Article 22 - Interests on overdue payments (article 31 of GAC supplemented)
Article 23 - Penalties for delay (article 32 of GAC supplemented)
Article 24 - Payment in case of a group of enterprises (article 33 of GAC)
Article 25 - Final detailed account (article 35 of GAC)
Article 26 - General detailed account (article 35 of GAC)
Article 27 - Tax and customs schedule (article 36 of GAC)
Article 28 - Stamp duty and registration (article 37 of GAC)

**Chapter III: Execution of the works**

Article 29 - Nature of works
Article 30 - Obligations of the Project Owner (GAC supplemented)
Article 31 - Execution deadline of Contract (article 38 of GAC)
Article 32 - Roles and responsibilities of the Contractor (article 40 of GAC)
Article 33 - Making available documents and site (article 42 of GAC)
Article 34 - Insurance of structures and civil responsibility (article 30 of GAC)
Article 35 - Documents to be furnished by the Contractor (article 49 supplemented)
Article 36 - Organisation and security of sites (article 50 of GAC)
Article 37 - Implantation of structures (article 52 of GAC)
Article 38 - Sub-Contracting (article 54 of GAC)
Article 39 - Site laboratory and trials (article 55 of GAC)
Article 40 - Site logbook (article 56 of GAC supplemented)
Article 41 - Use of explosives (article 60 of GAC)

**Chapter IV: Acceptance**

Article 42 - Provisional acceptance (article 67 of GAC)
Article 43 - Documents to be furnished after execution (article 68 of GAC)
Article 44 - Guarantee time-limit (article 70 of GAC)
Article 45 - Final acceptance (article 72 of GAC)

**Chapter V: Miscellaneous provisions**

Article 46 - Termination of the Contract (article 74 of GAC)
Article 47 - Force majeure (article 75 of GAC)
Article 48 - Differences and disputes (article 79 of GAC)
Article 49 - Drafting and dissemination of this Contract
Article 50 and last: Entry into force of the Contract

## Chapter I: General

**Article 1: Subject of Contract**

The subject of this Contract is the **THE CONSTRUCTION OF A REINFORCED CONCRETE MOM BRIDGE LINKING NJENKA AND MOM ALONG THE NJENKA-MOM ROAD AND THE CONSTRUCTION OF MBATMANDET BRIDGE LINKING MBATMANDET-FONTUH ROAD IN BALI COUNCIL AREA, MEZAM DIVISION OF THE NORTHWEST REGION BY EMERGENCY PROCEDURE**

**Article 2: Contract award procedure**

This Contract shall be awarded by Open National Invitation to Tender **N°03/ONIT/BC/BCITB/2026 OF 17/11/2026**

**Article 3: Definitions and duties (article 2 of GAC supplemented)**

3.1 *General definitions (cf. Code)2*

- The Contracting Authority is the **Lord Mayor of BALI Council**
  He/she awards the Contract, ensures the preservation of originals of said Contract documents and the transmission of copies to Ministry in charge of Public Contracts and to the body in charge of regulation.

- The Contract Engineer is the **Divisional Delegate of Public Works for Mezam** hereinafter referred to as the Engineer.

- The Project **Owner is the Lord Mayor of BALI Council.** She represents the beneficiary administration of the works.

  He ensures respect of the administrative, technical and financial conditions and Contractual deadlines.
- Project Managershall be the Chief of technical service BALI Council
- The Contractor shall be *[to be specified].*

3.2 *Security*

This Contract may use security subject to any form of transfer of the debt.
In this case:

- The authority in charge of ordering payment is *the* **Lord Mayor of BALI Council**
- The body or official in charge of payment is *the* **MT BALI council**
- The official competent to furnish information within the context of execution of this Contract is *the* **Divisional Delegate of Public works** and DDMINMAP MEZAM

3.3 Duties of the Control Mission, Project Manager

3.3.1 Missions *[to be completed, where need be]*

3.3.2 Means put at the disposal of the Control Mission [to *be completed where need be].*

**Article 4: Language, applicable law and regulation**

1.2 The language to be used shall be *[English and/or French].*

1.3 The Contractor shall be bound to observe the law, regulations and ordinances in force in Cameroon both within his own organization and in the execution of the Contract.

If the laws and regulations in force at the date of signature of this Contract are amended after the signature of the Contract, the possible direct resulting costs shall be taken into account without gain or loss for either party.

**Article 5:Constituent documents of the Contract (Article 4 of GAC)**

The constituent Contractual documents of this Contract are in order of priority: *(to be adapted to the nature of the works)*.

1) The tender or commitment letter;
2) The bidder's tender and its annexes in all provisions not contrary to the Special Administrative Conditions (GAC) and the Special Technical Conditions (STC) hereunder;
3) The Special Administrative Conditions (SAC);
4) The Special Technical Conditions (STC);
5) The particular elements necessary for the determination of the Contract price, such as, in order of priority: the unit price schedule, the statement of all-in prices, detailed estimates, the breakdown of all-in prices and the sub-details of unit prices;
6) Plans, calculation notes, trial documents, geotechnical documents *[insert and indicate, where need be, names and references]*.
7) The General Administrative Conditions applicable on public works Contracts that went into effect by Order No. 033/CAB/PM of 13 February 2007;
8) The General Technical Condition(s) applicable on the services forming the subject of the Contract *[insert and indicate, where need be, names and references]*.

**Article 6: General instruments in force**

This Contract shall be governed by the following general instruments *[to be adapted according to the case]*:

1. *Framework Law No. 96/12 of 5th August 1996 on the management of the environment;*
2. *The Mining Code;*
3. *Instruments governing the various professional bodies;*
4. *Decree No. 2002/058 of 23rd February 2002 relating to the setting up, organization and functioning of the Public Contracts Regulatory Agency*
5. *Decree No. 2003/651/PM of 16th April 2003 to lay down the procedure for implementing the tax and customs system applicable to Public Contracts;*
6. *Decree No. 2018/366 of 20thJune 2018 to institute the Public Contracts Code;*
7. *Decree No. 2022/074 of 8th March 2022 relating to the creation, organisation and functioning of Tenders Boards amended and supplemented by Decree No. 2026/271 of 5 August 2026;*
8. *Decree No. 2022/075 of 8th March 2022 to organise the Ministry in charge of Public Contracts;*
9. *Circular No. 002/CAB/PR of 19th June 2022 relating to the award and control of execution of Public Contracts;*
10. *Letter No; 00908/MINTP/DR of 1997 to publish guidelines for the consideration of environmental impact of road maintenance;*
11. *Circular No.01/C of 28 December, 2018 relating to the execution of finance law, monitoring and control of execution of the budget of the State, Public Administrative Establishments and Regional and Local Authorities and other public entities*
12. *Unified Technical Documents (DTU) for building works;*
13. *Applicable standards;*
14. *Other instruments specific to the domain concerned with the Contract.*

**Article 7:Communication (Articles 6 and 10 supplemented)**

1.1 All communications within the framework of this Contract shall be written and notifications sent to the following address:

a) In the case where the Contractor is the addressee: Sir/Madam.....
Beyond the time-limit of 15 days fixed in article 6(1) of the GAC to make his domicile known to the Project Owner and Contract Manager, correspondences shall be validly addressed to the [*to the specified*] council, chief town of the
Region in which the work was done;
b) In the case where the Project Owner is the addressee:

Sir/Madam_____ [*to be specified*] with a copy addressed to the Contracting Authority, Contract Manager, Contract Engineer, Project Manager and where need be, within the same deadline.

c) In the case where the Contracting Authority is:
Sir/Madam [*to be specified*] with a copy addressed within the same deadline to the Project Owner, Contract Manager, Contract Engineer and Project Manager, where applicable

1.2 The Contractor shall address all written notifications or correspondences to the Project Manager with a copy to the Contract Manager.

**Article 8:Administrative Orders (Article 8 of GAC)**

The various Administrative Orders shall be established and notified as follows:

8.1 The Administrative Order to start execution of works shall be signed by the Contracting Authority and notified to the Contractor by the Project Owner with a copy to the Contracting Authority, the ContractManager, Contract Engineer, the Paying Body and the Project Manager, where applicable.

8.2 Upon proposal by the Project Owner, Administrative Orders with an incidence on the objective, the amount and execution deadline shall be signed by Contracting Authority and notified by the Project Owner to the Contractor with a copy to the Contracting Authority, the Contract Manager, the Contract Engineer, the Project Manager and the Paying Body. The prior endorsement of the Paying Body shall possibly be required before the signature of those that have an incidence on the amount.

8.3 Administrative Orders of a technical nature linked to the normal progress of the work and without financial incidence shall be signed directly by Contract Manager and notified to the Contractor by the Contract Engineer (where applicable) with a copy to the Contracting Authority and Contract Manager.

8.4 Administrative Orders serving as warnings shall be signed by the Project Owner and notified to the Contractor by the Contract Manager with a copy to the Contracting Authority, the Contract Engineer and Project Manager.

8.5 Administrative Orders for suspension or resumption of work as a result of the weather or any other case of force majeure shall be signed by the Contracting Authority and notified by his services to the Contractor with a copy to the Project Owner, Contract Manager, Contract Engineer and Project Manager.

8.6 Administrative Orders prescribing works necessary to remedy disorders which could appear on structures during the guarantee period and not related to normal usage shall be signed by the Contract Manager upon the proposal of the Contract Engineer and notified to the Contractor by the Contract Engineer.

8.7 The Contractor has a time-limit of fifteen (15) days to issue reservations on any Administrative Order received. Having reservations shall not free the enterprise of executing the Administrative Orders received.

8.8 Concerning Administrative Order signed by the Contracting Authority and notified by the Project Owner, the notification must be done within a **maximum of 30 days** from the date of transmission by the Contracting Authority to the Project Manager. **Beyond this deadline, the Contracting Authority shall establish the default of the Project Owner, take over from him and carry out the said notification.**

**Article 9: Contracts with conditional phases (Article 9 of GAC)**

9.1 [*Specify if the Contract has one or several phases*]
At the end of a phase, the Project Owner shall carry out the acceptance of the works and issue an attestation of proper execution to the Contractor. This attestation shall condition the start of the following conditional phase.

9.2 The time-limit granted for notification of the Administrative Order to start execution of a conditional phase shall be five (5) days.

**Article 10: Contractor's equipment and personnel (Article 15 of GAC supplemented)**

10.1 Any modification, even partial, made to the technical bid shall only occur after the written approval of the Contract Manager. In case of modification, the Contractor shall have himself replaced by a member of staff of equal competence (qualifications and experiences).

10.2 In any case, the lists of supervisory staff to be used shall be subject to the approval of the Project Owner in the days following notification of the Administrative Order to start execution. The Project Manager has **5 (five) days** to notify his opinion in writing with a copy sent to the Contract Manager. Beyond this time-limit, the staff list shall be considered as approved.

10.3 Any unilateral modification on the supervisory staff made in the technical bid prior to and during the works shall be a reason for termination of the Contract as mentioned in article 30 below or the application of penalties [*to be specified where need be*].

## Chapter II: Financial conditions

**Article 11 Guarantees and bonds (Articles 29 and 41 of GAC)**

***11.1 Final bond***

The final bond shall be set at 2 % of the amount of the Contract, inclusive of all taxes.

It is constituted and transmitted to the Contract Manager within a maximum deadline of twenty (20) days of the notification of the Contract.

The bond shall be returned or the guarantee released within one month following the date of provisional acceptance of the works, following a release issued by the Contracting Authority upon request by the Contractor.

***11.2 Performance bond***

The retention fund shall be set at *10 %* of the amount of the Contract, inclusive of all taxes.
The return or release of the retention fund or security shall be done within one month after final acceptance by release issued by the**Contracting Authority** upon request by the Contractor.

***11.3 Guarantee of start-off advance***

[*Specify, if need be, the rates (20% maximum of the amount of the Contract inclusive of all taxes guaranteed at 100%) and conditions for the return of the guarantee*]

**Article 12: Amount of the Contract (Articles 18 and 19 of GAC supplemented)**

The amount of this Contract as indicated by the attached [*detail or estimates*] is_____ (in figures)_____(in letters) CFA francs Inclusive of All Taxes; that is:

- Amount exclusive of VAT: _____(_____) CFA F
- Amount of VAT: _____ (_____) CFA F.
- Amount of TSR and/or _____CFA F
- Net to be paid= EVAT-TSR and/or AIR

**Article 13: Place and method of payment**

The Project Owner shall release the sums due in the following manner:

a. For payments in CFA francs (*amount in figures and letters exclusive of taxes*) by credit to account No._____ opened in the name of the Contractor in the _____bank.

b. For payments in foreign currencies (*amount in figures and letters exclusive of taxes*) by credit to account No._____ opened in the name of the Contractor in _____bank.

**Article 14: Price variation (Article 20 of GAC)**

14.1 Prices shall be firm.

a. Payments on account made to the Contractor as advances shall not be revisable.
b. Revision shall be "frozen" upon expiry of the Contractual time-limit, except in the case of price reductions.

14.2 Price updating modalities (not applicable)

**Article 15: Price revision formulae (article 21 of GAC)**

(Not applicable)

**Article 16: Price updating formulae (article 21 of the GAC)**

(not applicable)

**Article 17: Works under State supervision (Article 22 of GAC supplemented)**

17.1 The percentage of works under State supervision shall be *[must not exceed 2 %]* of the amount of the Contract and its additional clauses, where applicable.

17.2 In the case where the Contractor were invited to execute works under State supervision, the submitted and duly justified expenditures shall be reimbursed to him under the following conditions:

- The quantities considered shall be the hours used or the quantities of building materials and materials used that was the subject of joint job cost sheets;

- The remunerations and salaries effectively paid to local labour shall be increased by forty percent (40 %) to take account of social benefits;

- The hours put in by the heavy equipment shall be counted at the rate featuring in the sub-detail of prices;

- Building materials and materials shall be reimbursed at cost price duly justified at the place of use, marked up by ten percent for loss, stocking and handling;

- The amount for services thus calculated, including the hours put by heavy equipment shall be marked up by 25 % to take into account the overheads, profits and the Contractor's unforeseen.

**Article 18: Evaluation of works (article 23 of the GAC)**

This Contract is at *[unit price, all-in price or unit and all-in price]*.

**Article 19: Evaluation of supplies (article 24 of the GAC supplemented)**

*19.1 [Indicate, where applicable, the modalities for payment of supplies].*

*19.2* No security shall be requested for payments on account on supplies.

**Article 20: Advances (article 28 of the GAC)**

20.1 The Contracting Authority *may* grant a start-off advance *equal to 20 % of the amount of the Contract.*

20.2 This advance whose value cannot exceed twenty (20) percent of the initial amount inclusive of all taxes shall be guaranteed at one hundred (100) percent by a banking establishment governed by Cameroon law or a first-rate financial institution in accordance with the instruments in force and

reimbursed by deduction of the payments on accounts to be paid to the Contractor during the execution of the Contract according to the modalities laid down in the Special Administrative Conditions.

20.3 The total amount of the advance must be reimbursed not later than when the value in basic price of the works reaches eighty (80) percent of the amount of the Contract.

20.4 As the reimbursement advances, the Project Owner shall issue the release of the corresponding part of the guarantee upon the express request by the Contractor.

20.5 The possibility of granting start-off advance or advance for supplies must be expressly stipulated in the Tender File.

**Article 21: Payment for works (articles 26, 27 and 30 of the GAC supplemented)**

**21.1 Establishment of works executed**

*Before the 30th of each month, the Contractor and the Project Manager shall jointly establish a job cost sheet which summarises and fixes the quantities executed and established for each item on the schedule during the month and capable of giving entitlement to payment.*

***21.2 Monthly detailed account***

*No later than the fifth (5th) of the month following the month of the services, the Contractor shall hand over to the Project Manager two draft provisional monthly detailed accounts in seven copies (one detailed account exclusive of VAT and the other inclusive of taxes), according to the agreed model and establishing the total amount of the sums to which he may lay claim as a result of the execution of the Contract since the start of the Contract.*

*Only the detailed account exclusive of VAT shall be paid to the Contractor. The detailed account of the amount of the taxes shall be the subject of an entry into the budgets of the Ministry in charge of Finance*

*Only the amount exclusive of VAT shall be paid to the Contractor as follows:*

- [100-1.1 and/or – (7.5 or 15%)] paid directly into the account of the Contractor;
- 2.5% or 5.5 % paid to the public treasury as AIR due by the Contractor.
- 7.5% or 15% paid into the Public Treasury as TSR due by the Contractor.

The Project Manager has a time-limit of seven (7) days to forward to the Contract Manager the detailed accounts he has approved.

The Contract Engineer has a maximum time-limit of twenty-one (21) days to forward the detailed accounts he approved such that they are in his possession not later than the twelfth of the month.
The Contract Manager has a deadline of fourteen (14) days maximum to sign the detailed accounts.

Payments shall be done by_____ within a maximum deadline of _____ calendar days from the date of submission of the approved detailed accounts.

21.3 **Detailed account of start-off account** (*if applicable*).

**Article 22: Interest on overdue payments (Article 31 of the GAC)**

Possible interests on overdue payments are paid by statement of sums due in accordance with article 88 of Decree No. 2005/275 of 24 September 2005 to institute the Public Contracts Code.

**Article 23: Penalties (Article 32 of the GAC supplemented)**

**A. Penalties for delay**

23.1 The amount set for penalties for delays is as follows:

a) One two thousandth (1/2000th) of the initial Contract amount all taxes inclusive per calendar day of delay from the first to the 30th day beyond the Contractual time-limit;

b) One thousandth (1/1000th) of the initial amount of the Contract inclusive of all taxes per calendar day beyond the 30th day.

23.2 The cumulated amounts of penalties for delay shall be limited to ten percent (10 %) of the initial Contract inclusive of all taxes.

**B. Specific penalties [amount to be indicated]**

23.3 Independently of penalties for overrun of Contractual time-limit, the Contractor shall be liable for the following special penalties for the non-observation of the provisions of the Contract, especially:

- Late submission of final bond;
- Late submission of insurances;
- Late submission of the draft execution schedule if the lateness is caused by the Contractor.

**Article 24: Payment in case of a group of enterprises (article 33 of the GAC)**

1. In the case of a group of enterprises, indicate the method of payment of co- and sub-Contractors, where need be.
2. Indicate the method of payment of sub-Contractors, where need be.

**Article 25: Final detailed account (article 34 of the GAC)**

25.1 *[Indicate the time-limit available to the Contractor to forward the draft to the Project Manager, after the date of provisional acceptance of the works (maximum 1 month)].*

After completion of the works and within a maximum time-limit of fourteen (14) days after the date of provisional acceptance, the Contractor shall establish, based on joint reports, the draft final detailed account of works executed and which detailed account summarises the total sums to which the Contractor may be entitled as a result of the execution of the whole Contract.

25.2 *The Contract Manager has up to thirty (30) days to notify the corrected and approved draft to the Project Manager.*

25.3 *The Contractor has up to thirty (30) days to return the signed final detailed account.*

**Article 26: General and final detailed account (article 35 of the GAC)**

26.1 The Contract Manager or the Project Manager has up to thirty (30) days to *establish the general detailed account and forward to the Contractor after final acceptance.*

At the end of the guarantee period which results in the final acceptance of the works, the Contract Manager draws up the general and final detailed accounts of the Contract which he has had signed jointly by the Contractor and the Contracting Authority. This detailed account includes:

- the final detailed account,
- the balance
- The summary of monthly payments on account.

The signing of the general and final detailed account without reservation by the Contractor definitely binds the two parties, puts an end to the Contract, except with regard to interest on overdue payments.

26.2 TheContractor has up to thirty (30) days to return the signed final detailed account.

**Article 27: Tax and customs regulations (article 36 of the GAC)**

Decree No. 2003/651/PM of 16 April 2003 lays down the terms and conditions for implementing the tax regulations and customs procedures applicable to Public Contracts. The taxes applicable to this Contract include notably:

- Taxes and dues relating to industrial and commercial profits, including the IAR which is a deduction on company taxes;
- Registration dues in accordance with the Tax Code;
- Dues and taxes attached to the execution of services provided for in the Contract;
    - Duties and taxes of entry into Cameroonian territory (customs duties, VAT, computer tax);

- Council dues and taxes
- Dues and taxes relating to the extraction of building materials and water.

These elements must be included in the costs which the undertaking imputes on its running costs and constitute one of the elements of the sub-details of prices exclusive of taxes.

All taxes inclusive prices means VAT included.

**Article 28: Stamp duty and registration of Contracts (article 37 of GAC)**

Seven (7) original copies of the Contract shall be stamped by and at the cost of the Contractor, in accordance with the applicable regulations.

## Chapter III: Execution of works

**Article 29: Nature of the works (article 46 of GAC)**

The works shall include especially: (position or volume of works)
*(To be specified cf. Special Technical Conditions)*

**Article 30: Role and responsibilities of the Project Owner (GAC supplemented)**

30.1 The Project Owner shall be bound to furnish the Contractor with information necessary for the execution of his mission and to guarantee, at the cost of the Contractor, access to sites of projects.

30.2 The Project Owner shall ensure the Contractor of protection against threats, insults, violence, assault and battery, slander or defamation of which he could be victim by reason of or during the exercise of his mission.

**Article 31: Execution time-limit of the Contract (article 38 of the GAC)**

31.1 The time-limit for the execution of the works forming the subject of this Contract shall be **Ninety (90) days.**

31.2 This time-limit shall run from the date of notification of the Administrative Order to commence execution of the works [*or that fixed in this Administrative Order- to be specified*].

**Article 32: Role and responsibilities of the Contractor (article 40 of the CAG)**

The detailed and general plan of progress of the works shall be communicated to the Project Manager in *five (05)* copies at the beginning of each.

**Article 33: Provision of documents and site (article 42 of the GAC)**

A reproducible copy of the plans featuring in the Tender File shall be submitted by *the Contract Manager*. The Project Owner shall make available the site and access ways to the Contractor at the appropriate time as the works progress.

**Article 34: Insurance of structures and civil liabilities (article 30 of GAC)**

The following insurance policies are required within the scope of this Contract in the minimum amounts indicated hereafter within fifteen (15) days of the notification of the Contract (*to be adapted*):

- *Liability insurance,business manager;*
- *Comprehensive insurance of the site;*
- *Insurance covering its ten-year obligation, where applicable.*

**Article 35: Documentsto be furnished by the Contractor (Article 49 of the GAC supplemented)**

[*Specify the deadlines for the transmission of documents as well as those of approval by persons to be designated*]

35.1 **Programme of works, Quality Assurance Plan and others** ***(to be specified).***

a) Within a minimum deadline of [*fifteen (15) days]* from the date of notification of the Administrative Order to commence execution, the Contractor shall submit in *[four (04)]* copies for the approval of [*Contract Manager after the endorsement of the Project Engineer]* the execution programme

of the works, his supply calendar, his draft Quality Assurance Plan and the Environment Management Plan, where applicable.
This programme shall be exclusively presented according to the furnished models.

Two (2) copies of these documents will be returned to him within a deadline of fifteen (15) days from the date of acceptance with:

- Either the indication "GOOD FOR EXECUTION";
- Or the indication of their rejection including the reasons for the said rejection.

The Contractor has eight (8) days to present a new draft. The Contract Manager or the Project Manager then has a deadline of five (5) days to give his approval or possibly make comments. Delay in approving the draft execution schedule shall stay the execution deadline.

The approval given by the Contract Manager or Project Manager does not in any way release the Contractor of his responsibilities. Meanwhile, works executed before the approval of the programme shall neither be ascertained nor paid for. The updated and approved schedule will become the Contractual schedule.

The Contractor shall constantly update on site, a schedule that will take account of real progress of the site. Significant modifications may only be made on the Contractual programme upon receiving the approval of the Project Manager. After approval of the execution schedule by the Contract Manager, the latter shall transmit it within five (5) days to the Contracting Authority without staying its execution. However, if important modifications alter the objective of the Contract or the nature of the works, the Contracting Authority shall return the execution schedule accompanied by reservations to be lifted within fifteen (15) days of the date of acceptance.

b) The Environment Management Plan should bring out notably the choice technical conditions of the site and basic life, conditions of the backfill of the extraction sites and conditions for reinstating the works and installation sites.

c) The Contractor shall indicate in this schedule the equipment and methods which he intends to use as well as the personnel he intends to employ.

d) The approval granted by the Contract Manager or Project Manager shall in no way diminish the responsibility of the Contractor with regard to the harmful consequences which their implementation may cause both towards third parties and the respect of clauses of the Contract.

**35.2 Execution draft**

a) The execution plan documents (*calculations and drawings*) necessary for the realisation of all the parts of the structure must be submitted for the endorsement of the [*Contract Manager or Project Manager*] at most fifteen (15) days prior to the date provided for the commencement of execution of the corresponding part of the structure.

b) The [*Contract Manager or Project Manager*] has a deadline of *[five (05) days]* to examine and make known his observations. The Contractor then has a deadline of [05) four *days*] to present a new file including the said observations.

35.3 In case of the non-observance of the approval deadlines of the above documents by the Administration, these documents shall be deemed to have been approved.

**Article 36: Organisation and safety of sites (article 50 of the GAC)**

36.1 Signboards at the beginning and end of each section must be placed within a maximum deadline of fifteen days after the notification of the Administrative Order to commence work.

36.2 The services to inform in case of interruption of traffic or along the deviated itinerary: *[To be specified in accordance with article 50(2) of the GAC].*

36.3 Indicate the special measures demanded of the Contractor, other than those provided for in the GAC, for rules of hygiene and safety and for circulation around or in the site.

**Article 37: Implantation of structures**

The Project Manager shall notify within [five] days following the date of notification of the Administrative Order to commence work, the basic points and levels of the project.

**Article 38: Sub-Contracting (article 54 of the GAC)**

The part of the works to be sub-Contracted shall be [*specify*] % of the initial amount of the Contract and its additional clauses (*the ceiling is 30 %*).

**Article 39: Site laboratory and trials (article 55 of GAC)**

39.1 Indicate if necessary the modalities for carrying out the trials and geotechnical studies provided for in the Special Technical Conditions.

39.2 The Contract Manager has a deadline of three days to approve the Contractor's personnel and laboratory as soon as the request is made.

**Article 40: Site logbook (article 56 of the GAC supplemented)**

40.1 The Site logbook must be systematically jointly signed by the Project Manager or Engineer, where need be and the Contractor's representative each day.

40.2 It is a joint document in a single copy. Its pages must be numbered and initialled. No page should be removed. The erased or cancelled parts must be mentioned on the margin for validation.

**Article 41: Use of explosives (article 60 of the GAC)**

[*Specify the possible restrictions or bans*]

## **Chapter IV:** ACCEPTANCE

Article 42: PROVISIONAL ACCEPTANCE

42.1 PRE- ACCEPTANCE OPERATIONS

Before the acceptance of the works the Contractor shall ask in writing to the control Engineer, to organize a technical visit for pre-acceptance. This visit shall include the following operations.

- Qualitative and quantitative evaluations of the different works that have been executed.
- Findings and statement of the unexecuted task envisaged in the present Jobbing Order.
- Findings relative to the completion of the work
- Findings on the quantity of works that have been effectively realized

These operations shall be subject to a site report drawn up on the field, signed by the following.

- Contract Engineer,
- Contractor.

During this pre-acceptance, the engineer shall eventually specify the reserves to be lifted and the corresponding works to be effected before the acceptance. The Contract Engineer shall fix the acceptance date in collaboration with the chief of service for the Contract.

**42.2 Acceptance**

The acceptance commission shall comprise:

1- The Authorizing Officer ..... (Chairman)
2- The Contract Engineer..... ..... (rapporteur)
3- DDMINMAP Mezam.....(Observer)
4- Chief of Technical Service BALI Council .....(Member)
5- The Contractor or his Representative.....(Member)

- MINMAP takes part in Technical, provisional and final reception.

The commission shall examine the report of the pre-acceptance and shall proceed to the acceptance. An acceptance report (process - verbal) of the works shall be prepared by the Contract Engineer and sign by all the commission members.

**Article 43: GUARANTEE PERIOD.**

The guarantee period is one (01) year from the date of the provisional acceptance for the section of new civil Engineering works.

**Article 44: Article 30: Final acceptance (article 72 of the GAC)**

44.1 Final acceptance shall take place within a maximum deadline of [fifteen (15) days] from the date of expiry of the guarantee.

44.2 The Project Manager [shall [not] be member of the commission.

The procedure for final acceptance shall be the same as for provisional acceptance

## Chapter V: Sundry provisions

**Article 30: Termination of the Contract (article 74 of the GAC)**
The Contract may be terminated as provided for in Part III Paragraph IV of Decree No. 2005/275 of 24 September 2005 and equally under the conditions laid down in articles 74, 75 and 76 of the GAC especially in one of the following cases:

- Delay of more than fifteen (15) calendar days in the execution of an Administrative Order or unjustified stoppage of more than seven (7) calendar days;
- Delay in work resulting in penalties of more than 10 % of the amount of the works;
- Refusal to repeat poorly executed works;
- Default by the Contractor;
- Persistent non-payment for services.

**Article 46: Case of force majeure (article 75 of the GAC)**
If the Contractor were to raise the issue of force majeure, the thresholds below which claims shall not be admitted are:

- *Rainfall: 200 millimetres in 24 hours;*
- *Wind: 40 metres per second;*
- *Flood: decennial flood frequency.*

**Article 47: Disagreements and disputes (article 79 of the GAC)**
Disagreements and disputes resulting from the execution of this Contract may be settled amicably. Where no amicable solution can be found for a disagreement, it is brought before the competent Cameroonian jurisdiction, subject to the following provisions: *[to be filled, where need be].*

**Article 48: Production and dissemination of this Contract**
*07* copies of this Contract shall be produced at the cost of the Contractor and furnished to the Contract Manager.

**Article 49 and last: Entry into force of the Contract**
This Contract shall be final only upon its signature by the Contracting Authority. It shall enter into force as soon as it is notified to the Contractor by the Contracting Authority.

# Document No. 5:
# Special Technical Conditions (STC)

**SUMMARY**

PRELIMINARY WORKS

EARTH WORKS

SIMPLE PROFILING WITH CREATION OF SIDE DRAINS AND OFF SHOOTS

SURFACE COURSE
REINFORCED CONCRETE CULVERT

## CHAPTER I

## GENERAL INSTRUCTIONS

**This present special Technical Clauses (CCTP) describes the**
**THE CONSTRUCTION OF A REINFORCED CONCRETE MOM BRIDGE LINKING NJENKA AND MOM ALONG THE NJENKA-MOM ROAD AND THE CONSTRUCTION OF MBATMANDET BRIDGE LINKING MBATMANDET-FONTUH ROAD IN BALI BALI COUNCIL AREA, MEZAM DIVISION OF THE NORTHWEST REGION BY EMERGENCY PROCEDURE**
The various works to be executed are detailed in the localisation of tasks, bill of quantities and the execution drawings conform to the typical drawings for model plans in the consultation document.

### ORIGIN OF MATERIAL

The necessary borrow sites shall be indicated by the supervisor after running identification tests on the materials.
When a borrow site chosen by a contractor is approved, he/she has to carry out sufficient number of samples and run the necessary identification tests which shall be compiled in a single document and submitted to the supervisor for approval. This shall comprise;

- Plan of localisation of the borrow pit
- Thickness of top soil
- The exploitable layer and volume
- Test results on natural moisture
- Test results on sieve analysis
- Test results on atterbergs limits
- Test results on modified proctor
- Test results on CBR

The Contractor can start the exploitation of any identified quarry upon the approval of the Supervisor. This approval can be withdrawn at any time the supervisor deems the borrow pits no longer produce quality material.

### LABORATORY

The contractor shall put in place a site laboratory equipped with the necessary equipment and personnel adequate to carry out the necessary tests and studies previewed in this present technical specification

In the case where more than 40% of the works in the contract do not require lab tests, then the contractor can leave from a permanent site lab and negotiate with a private lab of his choice where all his tests will be carried out.

**QUALITY OF MATERIAL**
**FILL MATERIAL**

Fill material should be free of organic debris and should be well graded in order to facilitate compaction. This material should have the following minimum characteristics;

- Max grain size Dmax=40mm
- Plasticity index IP<40
- Percentage of fines f<30
- CBR>15

Therefore, for every 1000m$^3$ of ordinary fill, the following reception tests shall be carried out;

- 2 Atterbergs limits
- 2 Granulometric analysis
- 2 Modified proctor
- 1CBR

In swampy areas, substitution material to be used should be material insensible to water, capable of retaining its bearing at saturation and not subjected capillary rise.

Thus, clean sandy laterite of granulometry of 0/6 or all-in aggregates of granulometry of 0/40 should be used.

**1 – GENERALITIES:** This present special technical specifications concerns THE CONSTRUCTION OF A REINFORCED CONCRETE MOM BRIDGE LINKING NJENKA AND MOM ALONG THE NJENKA-MOM ROAD AND THE CONSTRUCTION OF MBATMANDET BRIDGE LINKING MBATMANDET-FONTUH ROAD IN BALI BALI COUNCIL AREA, MEZAM DIVISION OF THE NORTHWEST REGION BY EMERGENCY PROCEDURE

. It is the duty of the contractor to realize the structure as per the execution plans that shall be approved by the competent authority and sample models of equipments and furniture provided by the project owner. Through the Project Engineer, the contractor shall furnish the owner of the project and other project team members within the shortest possible time with an execution plan showing clearly how he intends to run the work site. A fence in local materials shall enclose the whole work site to avoid trespassing.

**SIGN-POSTS:** The contractor shall put in place at his expense sign-posts indicating work in conformity with the plans put at his disposal by the authority that signed the contract.

**Hygiene and safety:** The contractor shall ensure total hygiene and security of the site by constructing a temporal pit latrine and putting up a temporal fence around the project site if that be the case.

The contractor shall be responsible for the protection of the structures before final reception. He shall be equally responsible for all tools and materials present at the work site. He shall seek an insurance policy to cover theft and fire incidence.

The contractor shall take all preventive measures against accidents. The owner of the project reserves the right to intervene in case of any emergency without necessary interfering with the responsibilities of the contractor.

The contractor shall verify all dimensions on the plans. For execution no dimension shall be measured with a scale rule from the plans. The contractor shall check in-situ the possibility of translating the dimensions on plans to the structure before work begins. He shall refer to the Project Engineer in case of any doubt. He shall not on his own modify anything on the structure and shall inform the Project Engineer of any changes that he considers necessary.

All modifications accepted by the contractor shall be accomplished in a specified duration and at his cost without modification of the contract amount. The owner of the project shall have the right to the final choice in case of any modification.

**2 - PREPARATORY WORKS – SETTING OUT:** These works concern the clearing of the site and evacuation of the rubbles to the public discharge, the clearing and leveling of the site where necessary. The setting out will be in respect to the technical plans.

The setting out profile boards will be at least 1, 20 m from the outside axes, this to facilitate trenching and other earthworks and good circulation. The commencement of excavation will be accepted by the Project Engineer without checking the conformity of the setting.
The minimal depth of the excavation trenches shall be of as will be specified by the geotechnical studies to be carried out by the contractor before the commencement of works to precise the soil bearing capacity.

Where there is black cotton soil or soil with low bearing capacity at the bottom of the trench, the contractor shall continue excavation up to a depth as will be approved by the Project Engineer. The excavations will be done manually or mechanically and no concrete or mortar shall be laid on the bottom of the trench without the acceptance of the trench bottom of excavation by the Project Engineer.

The descriptive notice completes or confirms the indications on the execution plans. In the case of contradictions between the plans and the descriptive notice, the project team shall be contacted for examination, elaboration and conclusion.

These technical specifications have as objective the definition of the consistence of works to be executed in accordance with the plans and according to technical norms for the construction of classroom buildings.
**ORIGIN, QUALITY AND PREPARATION OF MATERIALS:** The fine and coarse aggregates may either be from the river or quarry crushed and must be approved by the Project Engineer before any use on the site. The sand (0/5) shall have very fine elements settlement of less than 4%. The gravels (5/15 and 15/25) shall be clean and well graded with very fine elements settlement of less than 2%. The cement shall be CPA 325 class from CEMENCAM or from an approved factory.

The reinforcement steel for reinforced concrete shall be of type HA FeE400 for the main reinforcement steel rods and round-smooth RL E235 for the stirrup rings. Any fill material for the foundation and the surroundings structures shall have no particle dimension above 50mm and with plasticity index of less than 35. Fill materials shall also be free from organic elements and shall have a good granularity grading. No black vegetable soil shall be accepted for backfilling.

Stones for masonry works shall be of basalt, gneiss or granite type, be esthetical and should be gotten from the quarry or deposits approved by the Project Engineer with dimension sizes of not less than 20cm.

1) **CONCRETE:**
-***Ordinary concrete:*** specifically lean concrete shall be 5cm thick and laidall round the excavated foundation trenches before the stone/block work is carried out and dosed at 150kg/$m^3$.
- **Concrete for the*Raft:*** shall be 15cm thick laid on the entire floor of the bridge between the 02 abutments and dosed at 350kg/$m^3$ over the entire surface.
NB: The inlet to the bridge shall be excavated at a depth of 60cm below the natural soil and concreted along the width of the bridge between the wings at 01m to the 02 abutments so as to resist the scouring by water upfront. The raft will receive a longitudinal slope of 2%, slopping towards the outlet of the bridge (flow of water).
-***Reinforced concrete:*** shall be specifically for the footings, beams seatings and the slab of the bridge, kerbs and pillars of the mixt guard rails and their mixture shall be in a proportion of 350kg/$m^3$.
NB: All concrete works should be properly cured (i.e. water three times a day for seven days)

**NOTE: Reinforcement Schedule.**

| Nº | STRUCTURE | SIZES | Transversal RODS | Longitudinal RODS | STIRRUP | CONCRETE DOSAGE | TYPE |
|---|---|---|---|---|---|---|---|
| | | Nos | ϕ | Torsϕ | Spacings | | |
| 1 | Footing | | 12mm | 10mm | 20cm | 350kg/$m^3$ | Fe-E-400 |
| 3 | Beam seating | | 12mm | 10mm | 20cm | 400kg/$m^3$ | Fe-E-400 |
| 4 | Bridge slab | 4 | 12mm | 10mm | 15cm | 400kg/$m^3$ | Fe-E-400 |
| 5 | Bridge raft | 4 | 8mm | 8mm | 20cm | 350kg/$m^3$ | Fe-E-400 |
| | Kerb | | 8mm | 8mm | 20cm | 350kg/$m^3$ | Fe-E-400 |

| | | | | | | | |
|---|---|---|---|---|---|---|---|
| | Pillars guard rails | | 8mm | 8mm | 20cm | 350kg/$m^3$ | Fe-E-400 |

NB: All rods should preferably be imported

***Aggregate***

- ***Sand:*** Will be free from oxide, organic material of animals or plant origin. Sieving shall vary from vary from 0.16 – 5mm. It shallbe a mix of river and crushed sand mixed to the proportion as designed.

- ***Gravel:*** shall consist of natural and homogeneous materials or crushed stones. Tiny layer of grave (dust) shall be removed by sieving, blowing or washing. It shall a mix of 5/15 and 15/25

***Water:***

- To be used for the mixture mortar, concrete and washing of aggregates. Shall be clean and free from impurities ; meaning potable water.

***Cement:***

To be used mostly for cement mortar, all concrete mixtures shall satisfy the general conditions laid down by regulation in force. It will be type CPA325 Portland cement and shall not show any trace of uneven mixture. Storage on the building site shall be done on a dry and ventilated floor. Any stock presenting an unsatisfactory pulverulent condition will be discarded and cleared away within four (04) days.

***Rods:***

shall be mild steel reinforcement, Tor or Steel in accordance with the R/C &3 rules. The steel shall be perfectly clean without any trace of rust, non-adhesive to paint or grease.

***Shuttering:***

hard wood, to bear without any noticeable distortion, the load and pressure of concrete, the effect of vibration and weight of workers involved in setting it up.

**MASONRY:**

***Stones-***shall be as specified above

**Wood – Material:**

The wood must be pure and should not have nodes, foreign bodies or fractures due to sawing. This shall be locally sawn eucalyptus.

## MODE OF EXECUTION OF THE VARIOUS TASKS

### 1) TR001.1 - Site installation

**Description of works**

These works consist of the mobilization of materials and personnel, the realization of geotechnical and technical studies for the project as well as the performance program and final report, the construction of a hut for site meeting, Etc...

### 2) TR001.2- Project information sign post

**Description of works**

This consist of fabricating information boards in wood, the supply to the sites at the extremes of the various roads and eventually at the post of works (bridge) so as to furnish the populations with all information concerning the project.

The boards will carry the following information:

| **North-West Region**<br>******* | Republic of Cameroon<br>Peace-Work-Fatherland<br>******** |
|---|---|
| **Project name** | THE CONSTRUCTION OF A REINFORCED CONCRETE MOM BRIDGE LINKING NJENKA AND MOM ALONG THE NJENKA-MOM ROAD AND THE CONSTRUCTION OF MBATMANDET BRIDGE LINKING MBATMANDET-FONTUH ROAD IN BALI BALI COUNCIL AREA, MEZAM DIVISION OF THE NORTHWEST REGION BY EMERGENCY PROCEDURE |

| | |
|---|---|
| **Owner of the project** | Mayor BALI COUNCIL |
| **Funding body** | **RAOD FUND** |
| **Chief of Technical service** | BALI Council |
| **Project Engineer** | Div. Del. P. Works-Mezam |
| **Duration of the contract** | Four (04) months |
| **Contractor** | |

### 3) TM002 - Mobilization and folding up of equipment

**Description of works**

This task consists of the mobilization of equipment to the site through a loader and at the end of the works the folding up of the equipment by same means and the realization of all the works necessary to re-establish the lieu to their initial state.

### 4) 101 - BUSH CLEARING

**Description of works**

These works consist of removing vegetation and cleaning the edges of the road as well as on its immediate surroundings, felling trees and/ or trimming tree branches obstructing visibility, etc.

**Mode of execution of works**

This consists of clearing all vegetation at a width of two meters form the outer edge of the gutter and scraping and discarding vegetative soil from the road surface. These are labour intensive works carried out by groups of workers recruited from the community and equipped with the necessary tools to carry out the job.

### 5) 103 - Setting out of the structure

**Description of works**

This consists of carrying out activities geared at positioning the bridge at the coordinates such that the its axis will aligned with that of the access road from the both sides. Also the characteristics of the structure as designed should be respected.

**Mode of execution of works**

This consists of using pegs and lines and with the help of a levels position the bridge such it should be at right angle relative to the road with the wing walls at 45 degrees relative to the road or front walls of the bridge. Equally, the position of the areas to be excavated for the abutment including the working space should be materialized. As such the length and span of the bridge as well as the wing walls, the front wall and the abutment as a whole will be positioned. After the excavation these parameters will be verified firs before the bridge works proper starts

So done, the following data will be verified before the excavation

**LATERITE AND SCORIA FOR FILLING**

The laterite required to fill the road shall be of selected material. Quality of the laterite shall be special on the work site by the supervisor

**CULVERT RINGS**

Metallic Culverts used should meet the LCPC SETRA September 1981 standards;

Sheets in carbon sheets, resistant to temperature changes, meet NFA-35-556 standards on HR bolts intended for the construction structures.

Galvanised and hot asphalting will ensure protection against corrosion. The average layer of zinc deposited should be at least 725g/m2 on both sides and general mass should be more than 640g/m2

**SAND**

The nature and origin of sand shall remain the approval of the supervisor.

Is shall be gotten from a river or through crushing. Sand components should not be more than 80% and very fine constituents eliminated by settling less than 4%

**AGGREGATES**

They shall be obtained from deposits or quarries chosen by the contractor, and approved by the supervisor.

**CEMENT**
They should be of CPA 42.5 class and be obtained from an approved factory

**STONES**
They shall be obtained from a quarry or an approved deposit and not smaller than 20 cm

**TIMBER WORKS**
The wood use should have the following characteristics;
- should be very hard wood of bulk density at 12% humidity in g/cm3

## PRELIMINARY WORKS

This consist of areas to be cleared, trees to be felled and a width of the cleared area to be deforested,

Positioning of simple numbered markers (wooden pegs) on both sides of the road and beyond the width defined of the earthworks at 50m intervals such as to indicate the centre line of the road and the cross sections

## EARTH WORKS

The aim of this works is to transform the existing roadway into a uniform road section 4-6 metres wide, dig triangular ditches 1.5m wide and 0.6m deep in accordance with the model cross-sections.

The earthworks should as much as possible be minimised by fixing the longitudinal profile such as to directly reuse on the road section, all the good materials from the earth works which are accepted by the supervisor.

Special attention should be paid to the slope which should not be less than 4% on both sides of the centre line of the cross section and could reach 8% in the curves.
The compaction required for the road section shall be 95% of the dry modified optimum proctor density. This therefore requires the contractor to scarify existing road if necessary before reshaping it.

## REGRADING AND SHAPING OF EXISTING ROAD.

This has to be carried out with the use of a grader by shaping the road surface to be able to throw off water into the side drains that equally have to be created by the grader.
Off-shoots to evacuate the water away from the sides of the road should be created at regular intervals if the nature of the area permits it.

Where the existing road is wide enough and requires no further earth works, the contactor shall reshape the road using a grader such as to give it a cross section that conforms to the typical drawings, such reshaping must respect the rules; putting of materials in cordons, watering, levelling off and followed by compaction such as not to lose materials. The min degree of compaction is 90% of the modified optimum proctor density. Geotechnical test at an interval of every 500m shall be conducted to determine this density with a reference proctor for every 5km stretch for uniform soil texture.

## SURFACE COURSE

Before the execution of the surface course, the contractor shall submit to the National Laboratory "LABOGENIE" Civil Engineering or any other laboratory authorised by the control for approval, a composition of all materials from the possible borrow pits from which laterite to be used for the surface course.

Material from the laterite pits shall be transported from the pit sites to the project site by the use of trucks.

The surface course has to be compacted by the use of a compactor to the standards required by the geotechnical tests carried out on the laterite.

# Document No. 6:
# Schedule of unit prices

**PROJECT NO I**

| UNIT PRICE SCHEDULE FOR THE CONSTRUCTION OF A REINFORCED CONCRETE MOM BRIDGE LINKING NJENKA AND MOM ALONG THE NJENKA-MOM ROAD IN BALI COUNCIL AREA, MEZAM DIVISION OF THE NORTH WEST REGION. | | | | | | | | |
|---|---|---|---|---|---|---|---|---|
| **No** | **River** | **Height** | **Length** | **Width** | **Type road** | **Itenery** | **Pk** | |
| **1** | **MOM** | **2m** | **2 m** | **10M** | **RR** | | **2+00** | |
| **S/No** | **Description** | | | | **Unit** | **QTY** | **UP IN FIGURE** | **UP IN WORD** |
| | **Series 100-Preparatory works** | | | | | | | |
| **101** | Site installation (construction site hut, mobilisation, Etc...) | | | | LS | 1.00 | | |
| **102** | Project information sign post | | | | U | 2.00 | | |
| **103** | Execution Program and as built plan | | | | LS | 1.00 | | |
| | **Total installation** | | | | | | | |
| | **Series 200: Site preparation** | | | | | | | |
| **201** | Bush clearing | | | | M2 | 120.00 | | |
| **202** | Maintainance of trafic flow | | | | LS | 1.00 | | |
| **203** | Cleaning of the river bed | | | | M3 | 52.00 | | |
| **204** | Setting out of the structure | | | | ff | 1.00 | | |
| | **Total Site preparation** | | | | | | | |
| | **Series 300: Earth works** | | | | | | | |
| **301** | Excavation in ordinary terrain | | | | M3 | 123.00 | | |
| 302 | Drainage material behind the abutmments | | | | M3 | 6.70 | | |
| 303 | Fill and resurfacing of the accesses to the bridge | | | | M3 | 693.50 | | |
| | **Total Earth works** | | | | | | | |
| | **Series 400 - Fondations- abutments- Piles- beams-deck** | | | | | | | |
| **401** | Hard core | | | | M3 | 48.00 | | |
| **402** | Demolition | | | | ff | 1.00 | | |
| **403** | Lean concrete dosed at 150Kg/m3 | | | | M3 | 3.80 | | |
| **404** | Reinforced concrete box culvert of 2m x 2m x 10m | | | | Ml | 10.00 | | |
| **405** | Reinforced concrete dose at 400kg/m3 for the 4 heads | | | | M3 | 4.80 | | |
| | **Total Fondations- abutments- Piles- beams-deck** | | | | | | | |
| | **Series 500 - Paint** | | | | | | | |
| | **Series 500 - Equipment** | | | | | | | |
| **501** | Metallic guard rails | | | | Ml | 24.00 | | |
| **502** | Triangular sign posts type A ou AB | | | | U | 2.00 | | |
| **503** | Wooden post markers | | | | U | 12.00 | | |
| **504** | Drainage pipes | | | | U | 8.00 | | |

**PROJECT NO II**

## UNIT PRICE SCHEDULE FOR THE CONSTRUCTION OF MBATMANDET BRIDGE LINKING MBATMANDET-FONTUH ROAD, IN BALI COUNCIL AREA, MEZAM DIVISION OF THE NORTH WEST REGION.

| No | RIVER | HEIGHT (ML) | WIDTH(ML) | SPAN (ML) | | | | |
|---|---|---|---|---|---|---|---|---|
| 1 | MBATMANDET | 4.5 | 5 | 10 | | | | |
| S/No | DESCRIPTION | | | | Unit | QTY | Unit price | Total |
| | **Series 000-Installation** | | | | | | | |
| 1 | Site installations | | | | LS | 1.00 | | |
| 2 | mobilisation and demobilisation of equipment | | | | LS | 1.00 | | |
| 3 | Work execution program and as built plan | | | | LS | 1.00 | | |
| 4 | Geotechnical studies | | | | LS | 1.00 | | |
| | **Total installation** | | | | | | | |
| | **Series 100: Site preparation** | | | | | | | |
| 101 | Site clearance | | | | m2 | 860.00 | | |
| 102 | Traffic flow (diversion of water course/road) | | | | LS | 1.00 | | |
| 103 | Setting out of the bridge | | | | LS | 1.00 | | |
| | **Total Site preparation** | | | | | | | |
| | **Series 200: General Earth works** | | | | | | | |
| 201 | Excavation of trenches | | | | m3 | 960.00 | | |
| 202 | Backfilling of excavation | | | | m3 | 288.00 | | |
| 203 | Fill of the accesses of the bridge to raise the right of way 20m wide on both sides of the bridge and molding of the road to 6m wide | | | | m3 | 1220.00 | | |
| 204 | Resurfacing of the filled accesses to the bridge with laterite from borrowed pit | | | | M3 | 280.67 | | |
| | **Total General Earth works** | | | | | | | |
| | **Series 300 -FOUNDATION- ABUTMENT- DECK- WING WALL-** | | | | | | | |
| 301 | Hard core | | | | M3 | 144.00 | | |
| 302 | Stone masonry works for foundation abutment and wing walls | | | | m3 | 240.00 | | |
| 303 | Mass concrete 4cm thick dosed at 350Kg/m3 behind the stone masonry wall to render it impermiable | | | | M3 | 4.45 | | |
| 304 | Lean concrete dosed at 150Kg/m3 | | | | m3 | 4.12 | | |
| 305 | reinforced concrete dosed at 350Kg/m3 for the footings | | | | M3 | 38.00 | | |
| 306 | Reinforced concrete dosed at 400Kg/m3 for the beam seat, slab and kerbs | | | | m3 | 38.60 | | |
| 307 | reinforce concrete 15cm thick dosed at 350Kg/m3 for the bridge's raft | | | | m3 | 22.80 | | |
| 308 | Transitional Slab( 1mx0.1x8)cm length on both sides of the bridge | | | | m3 | 1.90 | | |
| 309 | IPE 500 for rib beams (cut offs of IPE 500) | | | | ML | 24.00 | | |
| 310 | IPE 500 for beams including all contigencies | | | | ML | 60.00 | | |
| 311 | Archor of rods HA25 to a rock | | | | ML | 24.00 | | |

| | | | | | |
|---|---|---|---|---|---|
| **312** | Drainage material behind the abutment | M3 | 62.00 | | |
| **314** | Construction of an embartment to retain the soil | M3 | 69.75 | | |
| | **Total Fondations- abutments- deck- wing wall** | | | | |
| | **Series 400 - EQUIPMENT** | | | | |
| **401** | Mix guard rails (concrete pillars and metallic pipes) | ml | 40.00 | | |
| **402** | weep holes in PVC | U | 48.00 | | |
| **403** | Drainage pipes (PVC 100) | ML | 12.00 | | |
| **404** | Metallic sign posts (type AB) | U | 2.00 | | |
| **405** | Round post markers (Balises) in treated Eucalyptus well seasoned wood | U | 16.00 | | |

# Document No. 7:
# Bill of quantities and estimates

# PROJECT NO I

**BILL OF QUANTITIES AND ESTIMATES FOR THE CONSTRUCTION OF A REINFORCED CONCRETE MOM BRIDGE LINKING NJENKA AND MOM ALONG THE NJENKA-MOM ROAD IN BALI COUNCIL AREA, MEZAM DIVISION OF THE NORTH WEST REGION.**

| | | | | | | Projected | | |
|---|---|---|---|---|---|---|---|---|
| **No** | **River** | **Height** | **Length** | **Width** | **Type road** | **Itenery** | **Pk** | |
| **1** | **MOM** | **2m** | **2 m** | **10M** | **RR** | | **2+00** | |
| **S/No** | **Description** | | | | **Unit** | **QTY** | **Unit price** | **Total** |
| | **Series 100-Preparatory works** | | | | | | | |
| **101** | Site installation (construction site hut, mobilisation, Etc...) | | | | LS | 1.00 | | |
| **102** | Project information sign post | | | | U | 2.00 | | |
| **103** | Execution Program and as built plan | | | | LS | 1.00 | | |
| | **Total installation** | | | | | | | |
| | **Series 200: Site preparation** | | | | | | | |
| **201** | Bush clearing | | | | M2 | 120.00 | | |
| **202** | Maintainance of trafic flow | | | | LS | 1.00 | | |
| **203** | Cleaning of the river bed | | | | M3 | 52.00 | | |
| **204** | Setting out of the structure | | | | ff | 1.00 | | |
| | **Total Site preparation** | | | | | | | |
| | **Series 300: Earth works** | | | | | | | |
| **301** | Excavation in ordinary terrain | | | | M3 | 123.00 | | |
| 302 | Drainage material behind the abutmments | | | | M3 | 6.70 | | |
| 303 | Fill and resurfacing of the accesses to the bridge | | | | M3 | 693.50 | | |
| | **Total Earth works** | | | | | | | |
| | **Series 400 - Fondations- abutments- Piles- beams-deck** | | | | | | | |
| **401** | Hard core | | | | M3 | 48.00 | | |
| **402** | Demolition | | | | ff | 1.00 | | |
| **403** | Lean concrete dosed at 150Kg/m3 | | | | M3 | 3.80 | | |
| **404** | Reinforced concrete box culvert of 2m x 2m x 10m | | | | Ml | 10.00 | | |
| **405** | Reinforced concrete dose at 400kg/m3 for the 4 heads | | | | M3 | 4.80 | | |
| | **Total Fondations- abutments- Piles- beams-deck** | | | | | | | |
| | **Series 500 - Paint** | | | | | | | |
| | **Series 500 - Equipment** | | | | | | | |
| **501** | Metallic guard rails | | | | Ml | 24.00 | | |
| **502** | Triangular sign posts type A ou AB | | | | U | 2.00 | | |
| **503** | Wooden post markers | | | | U | 12.00 | | |
| **504** | Drainage pipes | | | | U | 8.00 | | |

| | Total Equipment | | | | |
|---|---|---|---|---|---|
| | | I | TOTAL WITHOUT TAXES | | |
| | | II | VAT (19.25%) | | |
| | | III | AIR 2.2% or 5.5% | | |
| | | IV | TOTAL TAXES INCLUSIVE | | |
| | | V | NET TO BE PAID | | |

# PROJECT NO II

**BILL OF QUANTITIES AND ESTIMATES FOR THE CONSTRUCTION OF MBATMANDET BRIDGE LINKING MBATMANDET-FONTUH ROAD, IN BALI COUNCIL AREA, MEZAM DIVISION OF THE NORTH WEST REGION.**

| No | RIVER | HEIGHT (ML) | WIDTH(ML) | SPAN (ML) | | | | |
|---|---|---|---|---|---|---|---|---|
| 1 | MBATMANDET | 4.5 | 5 | 10 | | | | |
| S/No | DESCRIPTION | | | | Unit | QTY | Unit price | Total |
| | **Series 000-Installation** | | | | | | | |
| 1 | Site installations | | | | LS | 1.00 | | |
| 2 | mobilisation and demobilisation of equipment | | | | LS | 1.00 | | |
| 3 | Work execution program and as built plan | | | | LS | 1.00 | | |
| 4 | Geotechnical studies | | | | LS | 1.00 | | |
| | **Total installation** | | | | | | | |
| | **Series 100: Site preparation** | | | | | | | |
| 101 | Site clearance | | | | m2 | 860.00 | | |
| 102 | Traffic flow (diversion of water course/road) | | | | LS | 1.00 | | |
| 103 | Setting out of the bridge | | | | LS | 1.00 | | |
| | **Total Site preparation** | | | | | | | |
| | **Series 200: General Earth works** | | | | | | | |
| 201 | Excavation of trenches | | | | m3 | 960.00 | | |
| 202 | Backfilling of excavation | | | | m3 | 288.00 | | |
| 203 | Fill of the accesses of the bridge to raise the right of way 20m wide on both sides of the bridge and molding of the road to 6m wide | | | | m3 | 1220.00 | | |
| 204 | Resurfacing of the filled accesses to the bridge with laterite from borrowed pit | | | | M3 | 280.67 | | |
| | **Total General Earth works** | | | | | | | |
| | **Series 300 -FOUNDATION- ABUTMENT- DECK- WING WALL-** | | | | | | | |
| 301 | Hard core | | | | M3 | 144.00 | | |
| 302 | Stone masonry works for foundation abutment and wing walls | | | | m3 | 240.00 | | |
| 303 | Mass concrete 4cm thick dosed at 350Kg/m3 behind the stone masonry wall to render it impermiable | | | | M3 | 4.45 | | |

| | | | | | |
|---|---|---|---|---|---|
| 304 | Lean concrete dosed at 150Kg/m3 | m3 | 4.12 | | |
| 305 | reinforced concrete dosed at 350Kg/m3 for the footings | M3 | 38.00 | | |
| 306 | Reinforced concrete dosed at 400Kg/m3 for the beam seat, slab and kerbs | m3 | 38.60 | | |
| 307 | reinforce concrete 15cm thick dosed at 350Kg/m3 for the bridge's raft | m3 | 22.80 | | |
| 308 | Transitional Slab( 1mx0.1x8)cm length on both sides of the bridge | m3 | 1.90 | | |
| 309 | IPE 500 for rib beams (cut offs of IPE 500) | ML | 24.00 | | |
| 310 | IPE 500 for beams including all contigencies | ML | 60.00 | | |
| 311 | Archor of rods HA25 to a rock | ML | 24.00 | | |
| 312 | Drainage material behind the abutment | M3 | 62.00 | | |
| 314 | Construction of an embartment to retain the soil | M3 | 69.75 | | |
| | **Total Fondations- abutments- deck- wing wall** | | | | |
| | **Series 400 - EQUIPMENT** | | | | |
| 401 | Mix guard rails (concrete pillars and metallic pipes) | ml | 40.00 | | |
| 402 | weep holes in PVC | U | 48.00 | | |
| 403 | Drainage pipes (PVC 100) | ML | 12.00 | | |
| 404 | Metallic sign posts (type AB) | U | 2.00 | | |
| 405 | Round post markers (Balises) in treated Eucalyptus well seasoned wood | U | 16.00 | | |
| | **Total Equipment** | | | | |
| | TOTAL AMOUNT WITHOUT TAXES | | | | |
| | **VAT (19.25%)** | | | | |
| | **AIR (2.2% or 5.5%)** | | | | |
| | **AMOUNT ALL TAXES INCLUSIVE** | | | | |
| | **NET TO BE PAID** | | | | |

# Document No. 8:
# Schedule of sub-detail of prices

| DESIGNATION :Studies and site installation | | | | | |
|---|---|---|---|---|---|
| No | Daily out put | | Total quantity | Unit | Duration of activity |
| | | No | | | |
| WORKMAN SHIP | Category | | Daily wage | Days break up | Amount |
| | | | | | |
| | | | | | |
| | | | | | |
| | | | | | |
| | | | | | |
| | | | | | |
| | | | | | |
| | TOTAL A | | | | |
| EQUIPMENT/MECHINES | Type | No | Daily rate | Days break up | Amount |
| | | | | | |
| | | | | | |
| | | | | | |
| | | | | | |
| | | | | | |
| | TOTAL B | | | | |
| MATERIAL AND MISCELLANOUS | Type | Unit | Unit cost | Quantity | Amount |
| | | | | | |
| | | | | | |
| | | | | | |
| | | | | | |
| | | | | | |
| | | | | | |
| | | | | | |
| | | | | | |
| | TOTAL C | | | | |
| D | DIRECT TOTAL COST | | | A+B+C | |
| E | GENERAL SITE EXPENESES | | | Dx% | |
| F | GENERAL OFFICE EXPENSES | | | Dx% | |
| G | NET COST | | | D+E+F | |
| H | RISK + BENEFITS | | | Gx% | |
| P | TOTAL COST (HT) | | | G+H | |
| V | UNIT COST (HT) | | | P/Q'TY | |

# Document No. 9:
# Model Contract

REPUBLIQUE DU CAMEROUN
Paix – Travail – Patrie
---
MINISTERE DE L'ADMINISTRATION
ADMINISTRATION
---
REGION DU NORD - OUEST
---
DEPARTEMENT DE LA MEZAM
---
COMMUNE DE BALI

REPUBLIC OF CAMEROON
Peace – Work – Fatherland
---
MINISTRY OF TERRITORIAL TERRITORIALE
---
NORTH WEST REGION
---
MEZAM DIVISION
---
BALI COUNCIL

# OPEN NATIONAL INVITATION TO TENDER

**N° _____/ONIT/BALI COUNCIL/BCITB/2026OF ___ / ___ / 2026**

**FOR THE CONSTRUCTION OF A REINFORCED CONCRETE MOM BRIDGE LINKING NJENKA AND MOM ALONG THE NJENKA-MOM ROAD AND THE CONSTRUCTION OF MBATMANDET BRIDGE LINKING MBATMANDET-FONTUH ROAD IN BALI BALI COUNCIL AREA, MEZAM DIVISION OF THE NORTHWEST REGION BY EMERGENCY PROCEDURE.**

Project Owner [*Indicate name and full address]*

**HOLDER** : [*indicate name and full address of holder*]

P.O. Box_____, Tel:_____Fax: _____

Business Registry No._____at
Taxpayer's No._____

**SUBJECT** : *Execution of _____works;*
*Lot No._____; Network_____*

**PLACE** :Region_____

**EXECUTION DEADLINE** :_____(_____) months

**AMOUNT IN CFA F:**

| | |
|---|---|
| IAT | |
| EVAT | |
| VAT | |
| AIR (Income tax) | |
| Net to be paid | |

**FINANCING** : [*indicate the source of financing*]

**BUDGET HEAD** : [*to be completed*]

SUBSCRIBED ON:_____
SIGNED ON:_____
NOTIFIED ON:_____
REGISTERED ON:_____

**Between:**

The Government of the Republic of Cameroon, represented by_____ hereinafter referred to the "Contracting Authority"

**On the one hand,**

**And**

_____**(enterprise)**
P.O. Box_____Tel:_____Fax:_____
Business Registry No. _____
Taxpayer's No. _____

Represented by M _____, its General Manager, hereinafter referred to as the "Contractor"

**On the other hand,**

Agree on the following:

# Summary

Part I: Special AdministrativeConditions (SAC)

Part II: Special Technical Conditions (STC)

Part III: Schedule of Unit Prices (SUP)

Part IV: Details or Estimates

Page_____ and last of Contract No._____ C or JO/CA/TB/0000
Awarded after Invitation to Tender [*specify references of Invitation to Tender*]

With _____,

*For the execution of* _____*works*
*Lot No.*_____*;* _____*Network*

| Section No. | Road No. | Itinerary | Length (km) |
|---|---|---|---|
| | | | |
| | | | |
| | | | |

**EXECUTION DEADLINE**_____ (_____) months

**Amount of Contract in CFA F:**

| | |
|---|---|
| IAT | |
| EVAT | |
| VAT ( | |
| AIR (2.2 or 5.5 %) | |
| Net to be paid | |

| |
|---|
| **Read and accepted by the Contractor**<br><br>**(place of signature)_____(date)** |
| **Signature of Contracting Authority**<br><br>**(place of signature)_____(date)** |
| **Registration** |

**Document No. 10:**
**Models to be used by bidders**

## TABLE OF MODELS

1: Model Tender (Bid Letter)

2: Model bid bond

3: Model final bond

4; Model of Performance Bond (Model retention fund)

5: Model of start-off advance bond

6: Attestation of site visit

7; Model Declaration of Intention to Tender

8: Model Commitment of Availability of Personnel

9. Model Table of Equipment

10 Model Report of site visit

# 1: Model tender (bid letter)

I, the undersigned_____[*indcate the name and Capacity of signatory*]
Representing the _____company or enterprise or group with head office at_____
registered in the trade register of_____ under the number (No)_____

Having taken cognisance of all the documents featured or mentioned in the Tender File including the addendum (addenda): the Invitation to Tender *[recall the subject of the Invitation to Tender]*

- After having personally taken account of the situation of the site and evaluated from my point of view and under my responsibility, the nature and difficulty of the works to be carried out;
- Hereby submit, bearing my signature, the schedule of unit prices as well as the quotations in accordance with the structure featuring in the Tender File.
- Submit and commit myself to execute the works in accordance with the Tender File, in return for the prices which I myself established for each type of structure which prices reveal the amount of the Tender No. _____ at _____[*in figures and words*] CFA francs exclusive of VAT and at _____CFA francs Inclusive of all Taxes. [*In figures and words*].
- I pledge to execute the works within a deadline of .....months.
- I pledge to maintain my bid for [*indcate duration of validity, in principle 90days for national invitations to tender 120 days for international invitations to tender*] from the deadline of submission of bids.
- Rebates and the modalities of application of the said rebates shall be the following (in Case of the possibility of award of several lots).

The Project Owner shall pay the sums due for this Contract by crediting account No..... opened in.....Bank.....Branch
Prior to the signing of the Contract, this tender accepted by me shall constitute an agreement between us.
Done at..... on.....
Signature of.....
in the Capacity of.....duly authorised to sign the bids on behalf of.....

# 2: MODEL BID BOND

Addressed to *[indcate the Contracting Authority and his address]* "Contracting Authority"

Whereas the undertaking _____ hereinafter referred to as the "bidder" has submitted his bid on _____for *[recall the subject of the Invitation to Tender]*, hereinafter referred to as "the bid" and to which must be attached a bid bond equivalent to *[indicate the amount]* CFA francs.

We_____ *[name and address of the bank]*, represented by _____*[names of signatories]*, hereinafter referred to as "the bank" hereby guarantee payment to the Contracting Authority of the maximum sum of *[indicate the amount]* CFA francs, that the bank pledges to pay in full to the Contracting Authority, binding itself, its successors and assignees.

The conditions of this commitment are as follows:

If the bidder retires his bid during the validity period provided for in the Tender File;
Or
If the bidder, having been notified of the award of the Contract by the Contracting Authority during the validity period:

- Fails or refuses to sign the Contract, even though required to do so;
- Fails or refuses to furnish the final bond for the Contract (final bond) as provided for by the Contract;

We pledge to pay to the [Contracting Authority] an amount up to the maximum of the sum referred to above upon reception of the his first written request, without the Contracting Authority having to justify his request, given, however, that in his request the Contracting Authority shall note that he is due the amount he is claiming because one or the other or both of the above condition(s) has (have) been fulfilled and he shall specify which condition(s) took effect.

This bond shall enter into force from the date of signature and from the date set by the Contracting Authority for the submission of bids. It shall remain valid up till the thirtieth day inclusive following the end of the deadline for the validity of bids. Any request by the Contracting Authority to Cause it to take effect should reach the bank by registered mail with an acknowledgement of receipt before the end of this period of validity.

This bond shall, for purposes of its interpretation and execution, be subject to Cameroon law. Cameroon courts shall be the only jurisdictions competent to rule on this commitment and its consequences.

*Signed and authenticated by the bank at*_____, *on*_____

*[Bank's signature]*

# 3: Model final bond

Bank:
Reference of the bond: No_____

Addressed to *[Indcate the Project Owner and his address]* Cameroon, hereinafter referred to as the "Project Owner"

Whereas _____ *[name and address of Contractor]*, hereafter referred to as "the Contractor", has committed himself, in execution of the Contract referred to as "the Contract", to Carry out *[indicate the nature of the works]*.

Whereas it is stated in the Contract that the Contractor shall entrust to the Project Owner a final bond of an amount equal *to [indicate the percentage between 2 and 5%]* of the amount of the corresponding portion of the Contract, as guarantee of the execution of his full obligations in accordance with the terms of the Contract,

Whereas we have agreed to issue the Contractor this guarantee,

We, _____ *[name and address of bank]*
Represented by_____ *[name of signatories]*,
hereinafter referred to as "the bank", commit ourselves to pay the Project Owner, within a maximum deadline of eight (8) weeks, upon the simple written request declaring that the Contractor has not satisfied his Contractual commitments within the meaning of the Contract, without being able to defer the payment nor raise any contests for whatever reason, any sum up to the sum of _____ *[in figures and words]* .

We agree that no change or addendum or any other amendment to the Contract shall free us of any obligation incumbent on us by virtue of this final bond and we hereby incline to any notification, addendum or change.

This final bond shall enter into force upon signature and notification of the Contract. It shall be released within a deadline of *[indicate the deadline]* from the date of the provisional acceptance of the works.

After this date, the bond shall be baseless and should be returned to us without the express request on our part.

Any request for payment made by the Project Owner by virtue of this guarantee should be done by registered mail with acknowledgement of receipt to reach the bank during the period of validity of this commitment.

This bond shall, for purposes of its interpretation, be subject to Cameroon law. Cameroon courts shall be the only jurisdictions competent to rule on this commitment and its consequences.

*Signed and authenticated by the bank at* _____ *on* _____

*[Signature of the bank]*

# 4: Model of performance bond (Retention fund)

Bank: _____
Reference of the bond: No_____

Addressed to *[Indicate the Project Owner]*
*[Address of Contracting Authority]*

Hereinafter referred to as "the Project Owner"

Whereas_____ *name and address of Supplier]* hereinafter referred to "the Contractor", pledged, in execution of the Contract, to Carry out the works of *[indicate the subject of the works]*

Whereas it is stipulated in the Contract that the retention fund fixed at *[percentage below 10 % to be specified]* of the amount of the Contract may be replaced by a joint guarantee,

Whereas we have agreed to provide the Contractor with this guarantee,
We,_____ *[name and address of the bank]*,
Represented by _____ *[names of signatories]* and hereinafter referred to as "the bank",

Hence, we hereby affirm that on behalf of the Contractor, we guarantee and are responsible to the Project Owner for a maximum amount of_____
*[in figures and letters]* corresponding to *[percentage below 10 % to be specified]* of the Contract price.

And we pledge to pay to the Project Owner within a maximum deadline of eight (8) weeks upon his simple written request declaring that the Contractor has not fulfilled his Contractual obligations or is indebted to the Project Owner within the meaning of the Contract, amended where need be, by its additional clauses, without being able to defer the payment nor raise any contest for whatever reason, any sum(s) within the limits of the amount equal to *[percentage below 10 % **to be specified**]* of the total amount of the works featuring in the final detailed account, without the Project Owner having to prove or give the reasons nor the motive for the amount of the sum indicated above.

We hereby agree that no change or addendum or any other amendment shall release us of any obligation incumbent on us by virtue of this bond and we hereby incline by the present to the notification of any amendment, addendum or change.

This bond shall enter into force upon signature. It shall be released within thirty (30) days from the date of the final acceptance of the works and upon release issued by the Project Owner.

Any request for payment made by the Project Owner by virtue of this bond should be done by registered mail with acknowledgement of receipt to reach the bank during the period of validity of this commitment.
This bond shall, for purposes of its interpretation and execution, be subject to Cameroon law. Cameroon courts shall be the only jurisdictions competent to rule on this pledge and its consequences.

*Signed and authenticated by the bank at*_____ *on* _____

*[Signature of the bank*

## 5: Model of start-off advance bond

Bank: reference, address_____

We, the undersigned, (bank, address) hereby declare by the present to guarantee on behalf of_____ [*the holder*] to the benefit of the Project Owner [*address of the Project Owner]*
*(The beneficiary)*

The payment, without contest and upon receipt of the first written request by the beneficiary, declaring that_____[*the holder*] has not fulfilled his obligations relating to the reimbursement of the start-off advance according to the terms of Contract No._____ of _____ relating to _____ works [*indicate the subject of the works, the references of the Invitation to Tender and the lot, if possible*] of the total sum corresponding to to the advance of [*twenty (20) %*] of the amount inclusive of all taxes of Contract No. _____, payable upon notification of the corresponding Administrative Order that is, _____CFA francs.

This bond shall enter into force and shall take effect upon reception of the respective parts of this advance into the accounts of_____ [*the holder*] opened in the_____ bank under No. _____.

This bond shall remain in force up till the reimbursement of the advance in accordance with the SAC. However, the amount of the bond shall be proportionately reduced on the progressive reimbursement of the advance.

The applicable law and jurisdiction shall be those of the Republic of Cameroon.

*Signed and authenticated by the bank at*_____ *on* _____

[*Signature of the bank]*

# Document No.11: Preliminary studies

[To be systematically filled by the Project Owner based on the nature of services to be executed and according to the specifications of Point 5.a of Circular No. 003/CAB/PM of 18th April 2008 relating to the respect of rules governing the award, execution and control of Public Contracts]

## Note on preliminary studies

In accordance with the Public Contracts Code, the Project Owner or Delegated Project Owner must, prior to commencing the procedure to award Contracts or refer to the competent Tenders Board, ensure that draft Tender Files are prepared based on preliminary studies.

These studies must be required during the examination of the Tender File (TF) by the Tenders Board.

The Project Owner is bound to fill the questionnaire in annex 1 accompanied by justifications of the said studies.

### Justification of preliminary studies

1. Attach the preliminary studies.
2. Indicate
   - 2.1. The date studies were carried out;
   - 2.2. The name of the public or private Project Manager
   - 2.3. References of the Contract, if Private Manager carried it out;
   - 2.4. If maintenance works
     - 2.4.1 Description of the studies;
     - 2.4.2 Attach the outline of the itinerary bringing out readings of degradations as well as the approved programming documents.
   - 2.5 Rehabilitation or new works
     - 2.5.1 Are quantities in the quotations the same as those of the studies?
     - 2.5.2 Description of studies: Draft Preliminary Study, Detailed Preliminary Study;
     - 2.5.3 Attach the said studies.

N.B. For services of less scope, the Project Owner may furnish a justification of calculation of quantities of the Tender File.

- *The chairperson of the Tenders Board may, before taking a decision, seek expert advice on the quality of the studies.*

# Document No. 12:
# List of banking establishments and financial bodies authorised to issue bonds for Public Contracts

**I- BANKS**

1. Afriland First Bank
2. Banque Atlantique
3. Banque Camerounaise des petites et moyennes entreprises (BC-PME)
4. Banque Gabonaise pour le Financement International (BGFI BANK)
5. Banque International du Cameroun pour l'Epargne et le Crédit (BICEC)
6. Bank of Africa Cameroon (BOA Cameroun)
7. CITI Bank Cameroun
8. Commercial Bank of Cameroon (CBC)
9. Ecobank Cameroun (ECOBANK)
10. National Financial Credit Bank (NFC)
11. Société Camerounaise de Banque au Cameroun (SCB-Cameroun)
12. Société Générale de Banque au Cameroun(SGC)
13. Standard Chartered Bank Cameroon (SCBC)
14. Union Bank of Cameroon(UBC)
15. United Bank for Africa(UBA)

**II- Insurance companies**

16. Activa Insurance
17. Zenithe Insurance SA BP Douala
18. Aréa Assurances S.A
19. Atlantique Asssurances S.A
20. Beneficial General Insurance S.A
21. Chanas Assurances S.A
22. CPA S.A
23. Nsia Assurancs S.A
24. Pro Assur S.A
25. SAAR S.A
26. Saham Assurances

# PLANS

PROJECT NO I

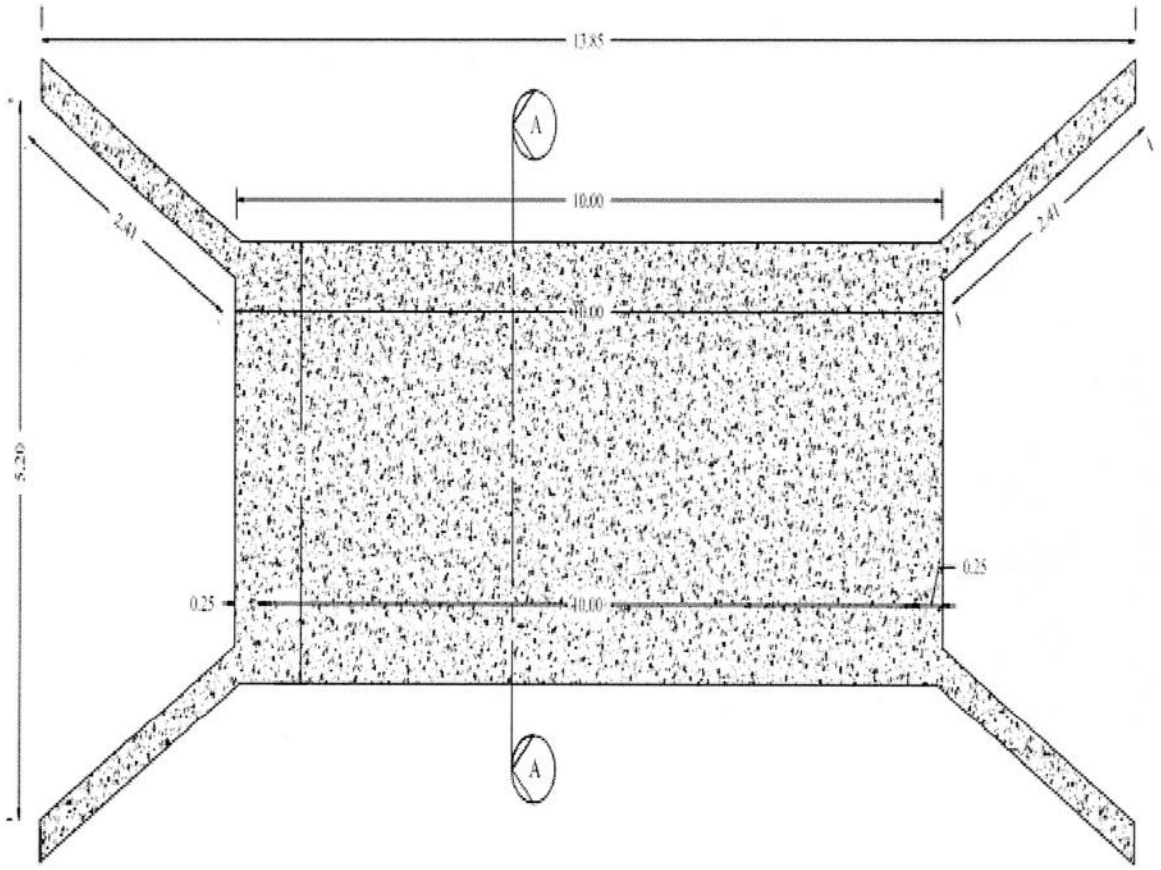


PLAN

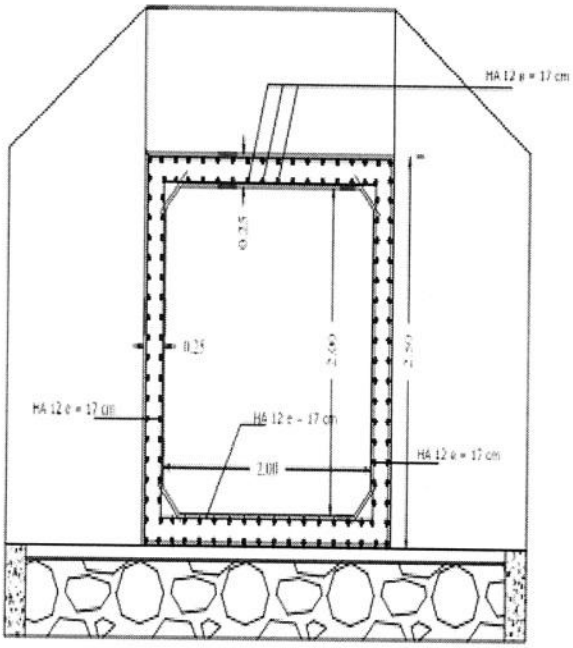


REINFORCEMENT
SECTION A-A

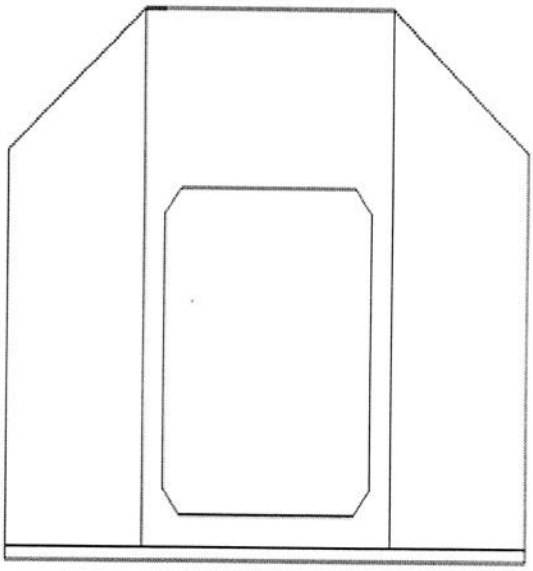

TRANSVERSAL
ELEVATION

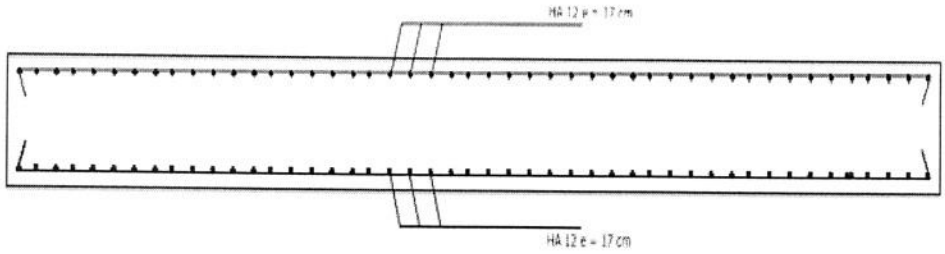


SECTION OF SLAB DETAIL

# PROJECT NO II

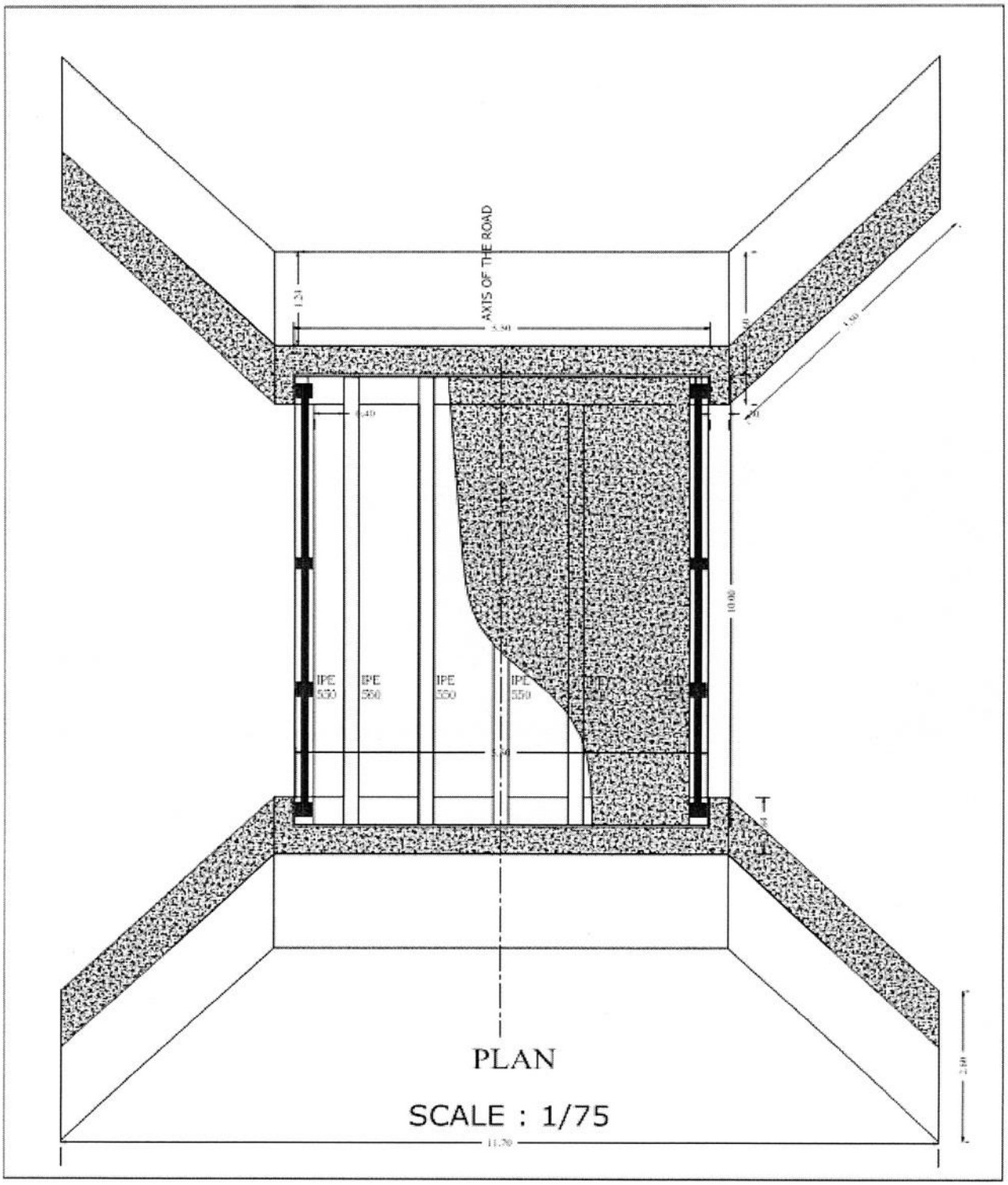

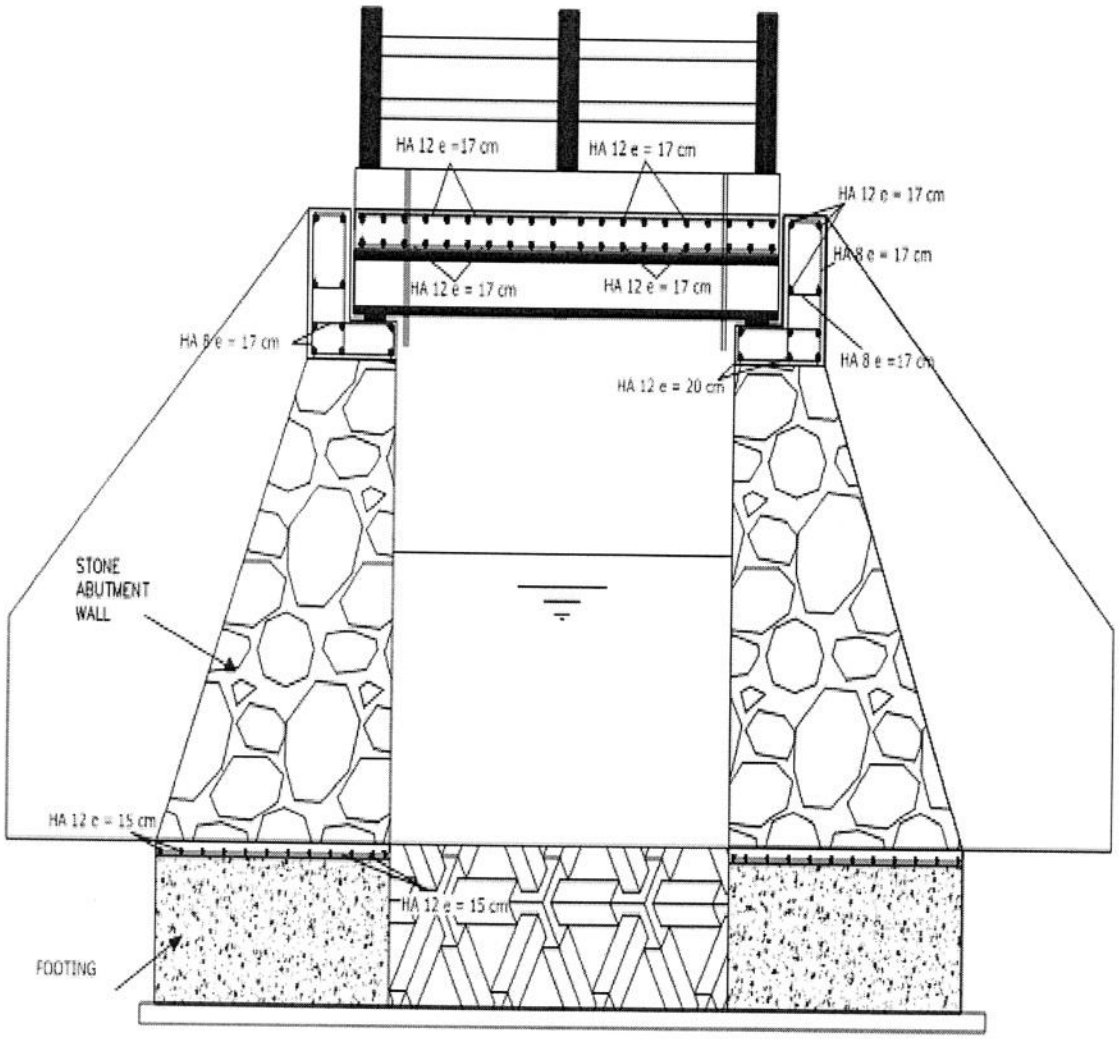


LONGITUDINAL REINFORCEMENT
CROSS SECTION

SCALE: 1/75

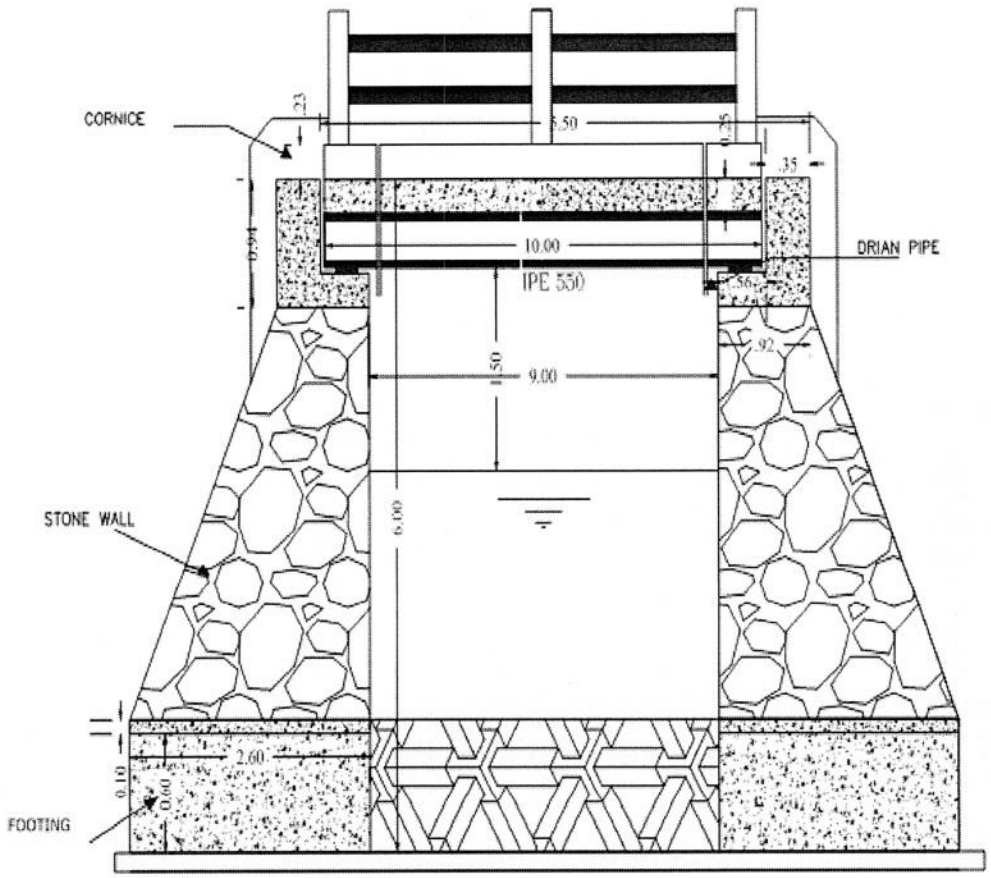


LONGITUDINAL CROSS SECTION

SCALE: 1/7

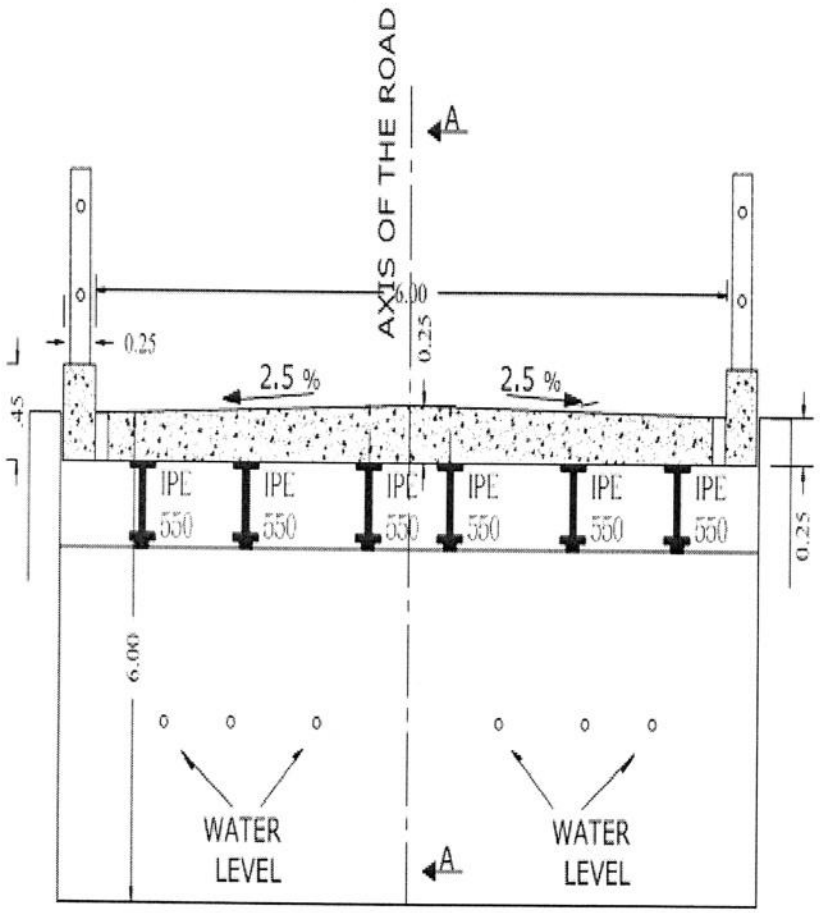


TRANSVERSAL CROSS SECTION

SCALE : 1/75

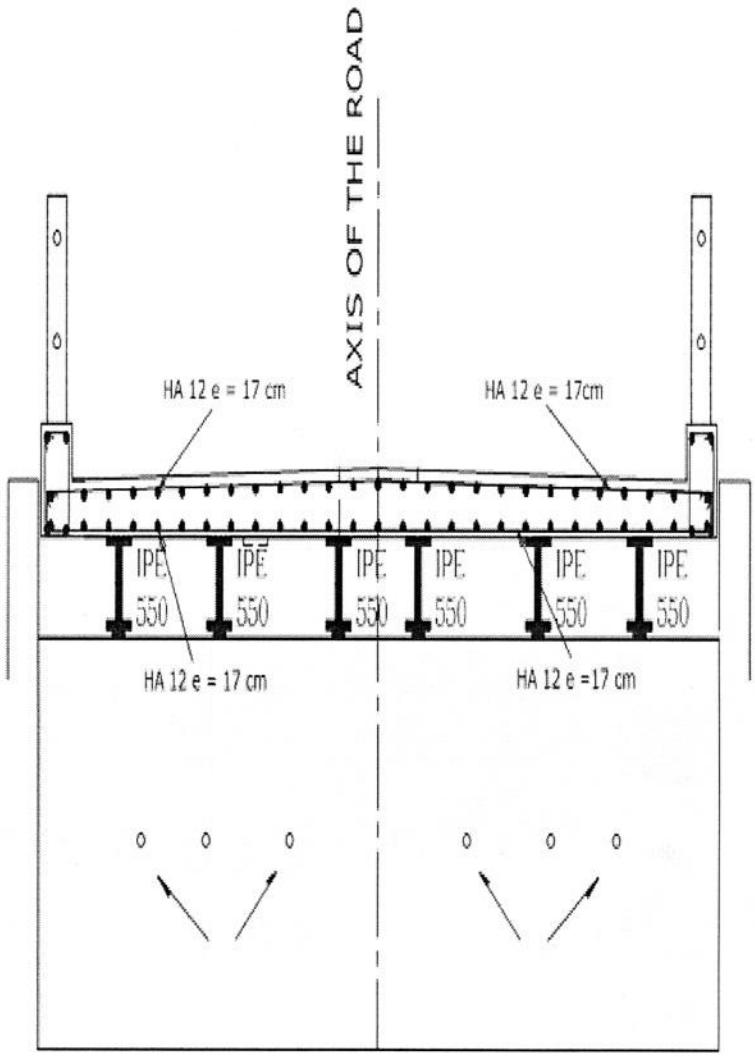


TRANSVERSAL REINFORCEMENT
CROSS SECTION

SCALE : 1/75